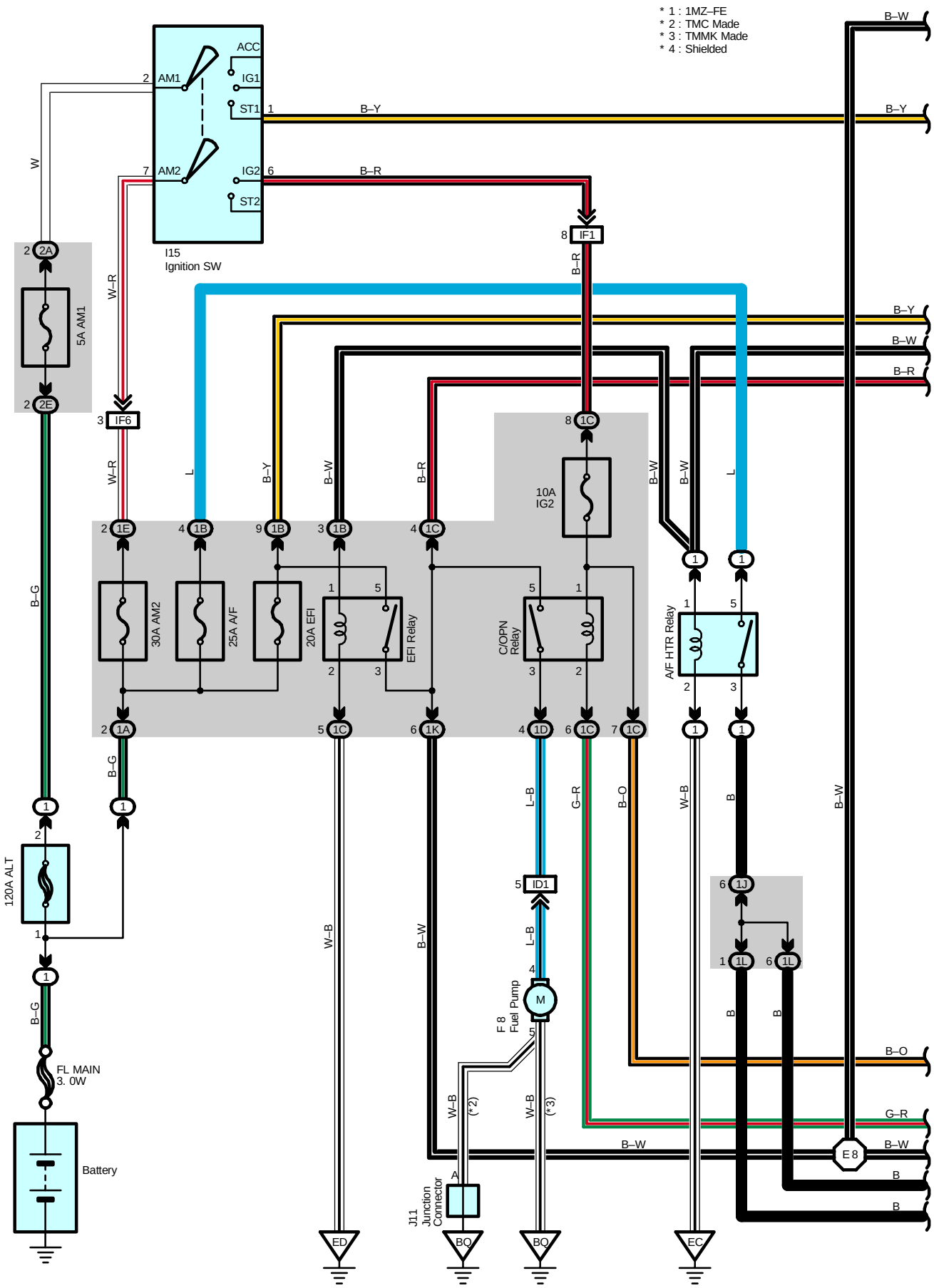
* 1 : 1MZ–FE
* 2 : TMC Made
* 3 : TMMK Made
* 4 : Shielded
ACC
IG1
ST1
AM1
AM2
IG2
ST2
I15
Ignition SW
IF1
IF6
5A AM1
10A IG2
30A AM2
25A A/F
20A EFI
EFI Relay
C/OPN Relay
A/F HTR Relay
120A ALT
FL MAIN
3. 0W
Battery
F 8
Fuel Pump
ID1
J11
Junction Connector
E 8
ED
BQ
EC
B–W
B–Y
B–R
W–R
B–G
L
W
B–O
G–R
L–B
W–B
B