2004 Lexus GS 300 L6-3.0L (2JZ-GE)

Vehicle > Accessories and Optional Equipment > Radio, Stereo, and Compact Disc > Diagrams > Electrical - Interactive Color (Non OE)

Sound Systems - W/ Mark Levinson - Page 1 of 2

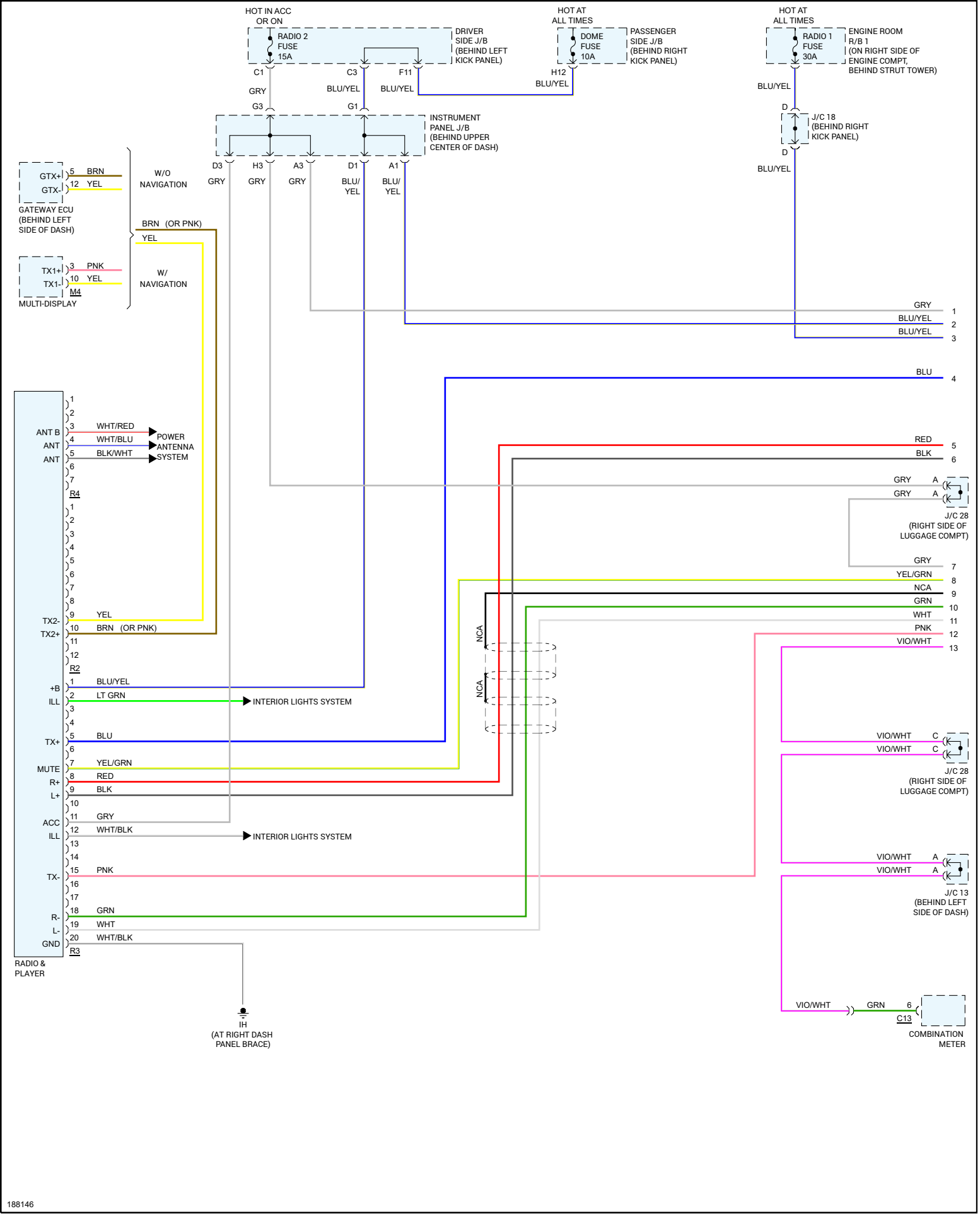

2004 Lexus GS 300 L6-3.0L (2JZ-GE)

Vehicle > Accessories and Optional Equipment > Radio, Stereo, and Compact Disc > Diagrams > Electrical - Interactive Color (Non OE)

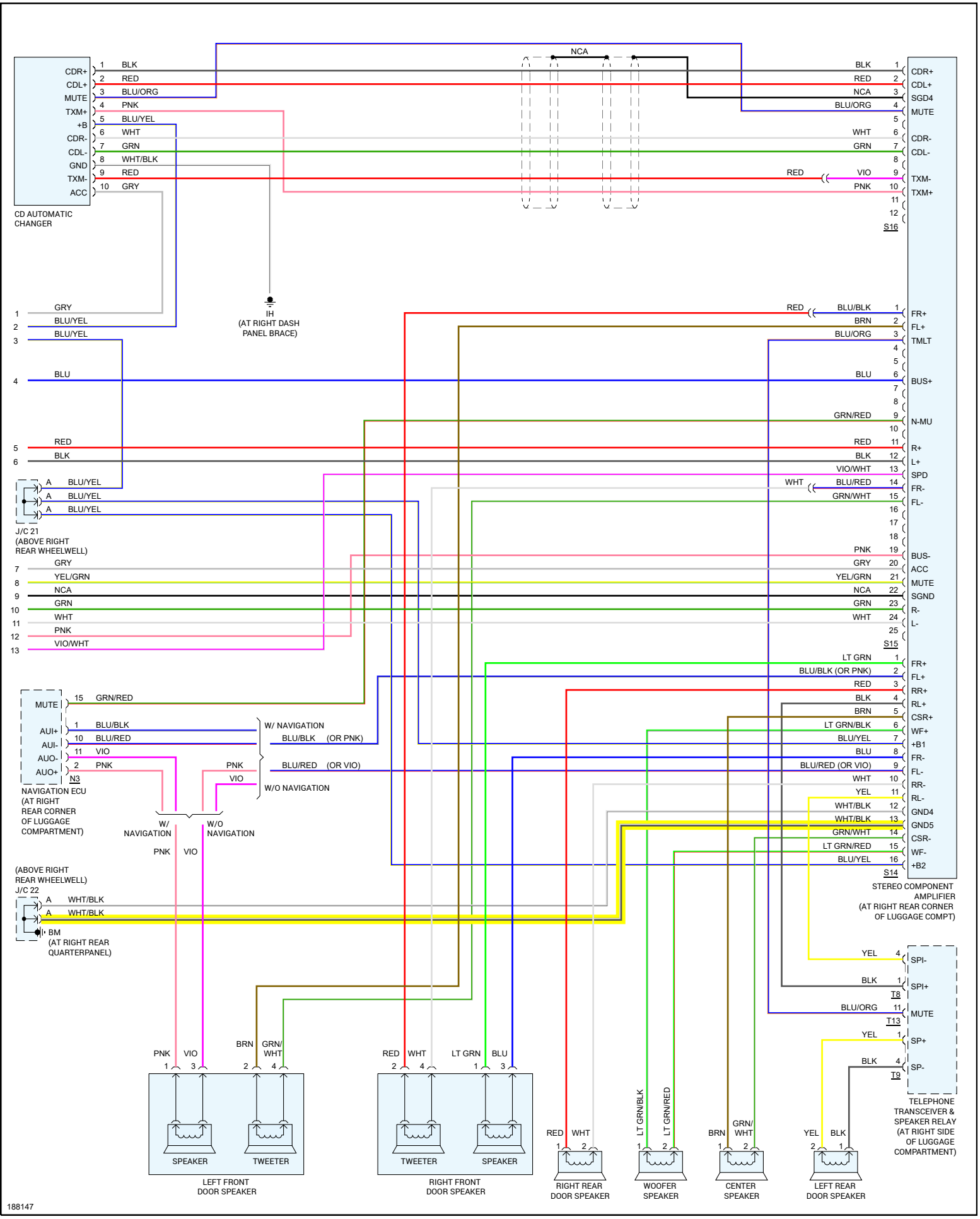
CD AUTOMATIC CHANGER
CDR+ 1 BLK
CDL+ 2 RED
MUTE 3 BLU/ORG
TXM+ 4 PNK
+B 5 BLU/YEL
CDR- 6 WHT
CDL- 7 GRN
GND 8 WHT/BLK
TXM- 9 RED
ACC 10 GRY
NCA
BLK 1 CDR+
RED 2 CDL+
NCA 3 SGD4
BLU/ORG 4 MUTE
WHT 6 CDR-
GRN 7 CDL-
RED VIO 9 TXM-
PNK 10 TXM+
S16
IH (AT RIGHT DASH PANEL BRACE)
1 GRY
2 BLU/YEL
3 BLU/YEL
4 BLU
5 RED
6 BLK
J/C 21 (ABOVE RIGHT REAR WHEELWELL)
A BLU/YEL
A BLU/YEL
A BLU/YEL
7 GRY
8 YEL/GRN
9 NCA
10 GRN
11 WHT
12 PNK
13 VIO/WHT
RED BLU/BLK 1 FR+
BRN 2 FL+
BLU/ORG 3 TMLT
BLU 6 BUS+
GRN/RED 9 N-MU
RED 11 R+
BLK 12 L+
VIO/WHT 13 SPD
WHT BLU/RED 14 FR-
GRN/WHT 15 FL-
PNK 19 BUS-
GRY 20 ACC
YEL/GRN 21 MUTE
NCA 22 SGND
GRN 23 R-
WHT 24 L-
S15
LT GRN 1 FR+
BLU/BLK (OR PNK) 2 FL+
RED 3 RR+
BLK 4 RL+
BRN 5 CSR+
LT GRN/BLK 6 WF+
BLU/YEL 7 +B1
BLU 8 FR-
BLU/RED (OR VIO) 9 FL-
WHT 10 RR-
YEL 11 RL-
WHT/BLK 12 GND4
WHT/BLK 13 GND5
GRN/WHT 14 CSR-
LT GRN/RED 15 WF-
BLU/YEL 16 +B2
S14
STEREO COMPONENT AMPLIFIER (AT RIGHT REAR CORNER OF LUGGAGE COMPT)
MUTE 15 GRN/RED
AUI+ 1 BLU/BLK
AUI- 10 BLU/RED
AUO- 11 VIO
AUO+ 2 PNK
N3
NAVIGATION ECU (AT RIGHT REAR CORNER OF LUGGAGE COMPARTMENT)
W/ NAVIGATION
BLU/BLK (OR PNK)
BLU/RED (OR VIO)
PNK
VIO
W/O NAVIGATION
W/ NAVIGATION
W/O NAVIGATION
PNK VIO
(ABOVE RIGHT REAR WHEELWELL) J/C 22
A WHT/BLK
A WHT/BLK
BM (AT RIGHT REAR QUARTERPANEL)
YEL 4 SPI-
BLK 1 SPI+
T8
BLU/ORG 11 MUTE
T13
YEL 1 SP+
BLK 4 SP-
T9
TELEPHONE TRANSCEIVER & SPEAKER RELAY (AT RIGHT SIDE OF LUGGAGE COMPARTMENT)
PNK VIO BRN GRN/WHT
SPEAKER TWEETER
LEFT FRONT DOOR SPEAKER
RED WHT LT GRN BLU
TWEETER SPEAKER
RIGHT FRONT DOOR SPEAKER
RED WHT
RIGHT REAR DOOR SPEAKER
LT GRN/BLK LT GRN/RED
WOOFER SPEAKER
BRN GRN/WHT
CENTER SPEAKER
YEL BLK
LEFT REAR DOOR SPEAKER
188147