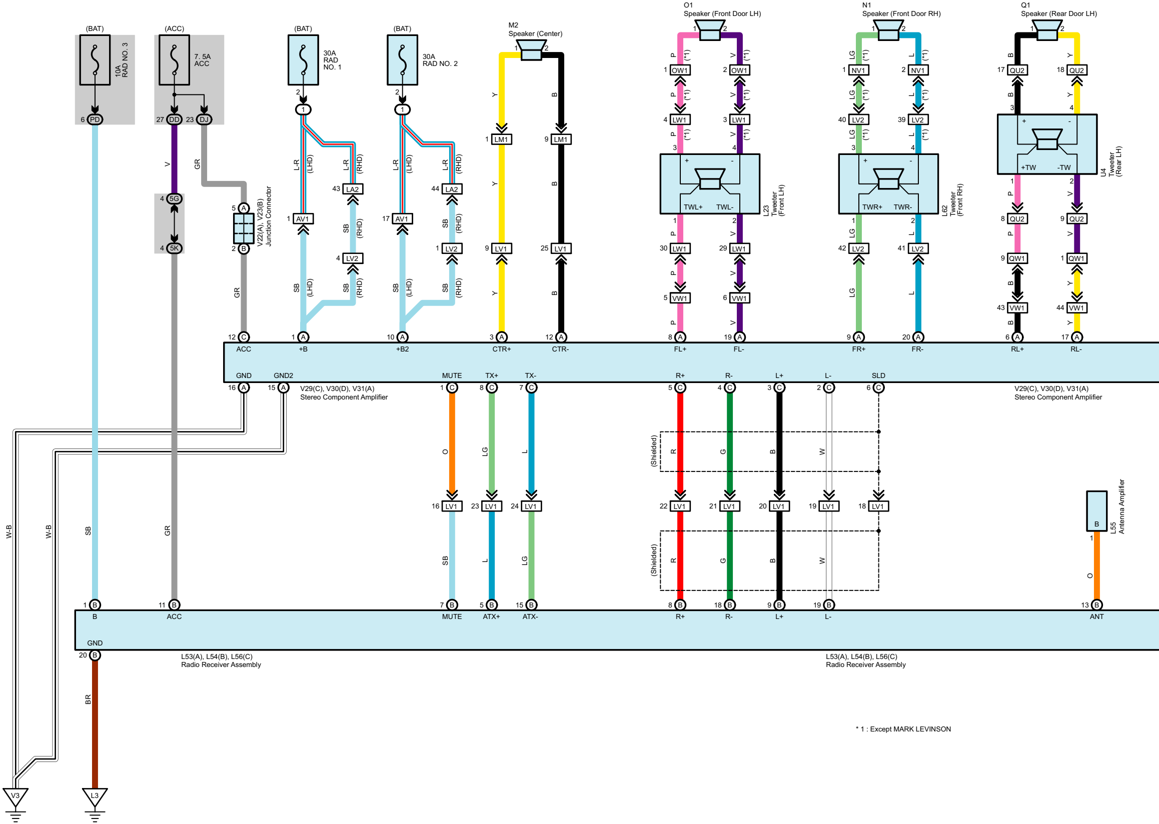
(BAT)
10A RAD NO. 3
6 PD
(ACC)
7. 5A ACC
27 DD
23 DJ
(BAT)
30A RAD NO. 1
(BAT)
30A RAD NO. 2
M2
Speaker (Center)
O1
Speaker (Front Door LH)
N1
Speaker (Front Door RH)
Q1
Speaker (Rear Door LH)
1 OW1
2 OW1
4 LW1
3 LW1
1 NV1
2 NV1
40 LV2
39 LV2
17 QU2
18 QU2
U4
Tweeter (Rear LH)
+TW
-TW
8 QU2
9 QU2
9 QW1
1 QW1
43 VW1
44 VW1
L23
Tweeter (Front LH)
TWL+
TWL-
L62
Tweeter (Front RH)
TWR+
TWR-
30 LW1
29 LW1
5 VW1
6 VW1
42 LV2
41 LV2
1 LM1
9 LM1
9 LV1
25 LV1
4 5G
4 5K
V22(A), V23(B)
Junction Connector
1 AV1
43 LA2
4 LV2
17 AV1
44 LA2
1 LV2
L-R
(LHD)
(RHD)
SB
V
GR
Y
B
P
LG
L
(*1)
12 C ACC
1 A +B
10 A +B2
3 A CTR+
12 A CTR-
8 A FL+
19 A FL-
9 A FR+
20 A FR-
6 A RL+
17 A RL-
16 A GND
15 A GND2
1 C MUTE
8 C TX+
7 C TX-
5 C R+
4 C R-
3 C L+
2 C L-
6 C SLD
V29(C), V30(D), V31(A)
Stereo Component Amplifier
O
LG
L
(Shielded)
R
G
B
W
16 LV1
23 LV1
24 LV1
22 LV1
21 LV1
20 LV1
19 LV1
18 LV1
L55
Antenna Amplifier
W-B
BR
1 B B
11 B ACC
7 B MUTE
5 B ATX+
15 B ATX-
8 B R+
18 B R-
9 B L+
19 B L-
13 B ANT
20 B GND
L53(A), L54(B), L56(C)
Radio Receiver Assembly
V3
L3

* 1 : Except MARK LEVINSON

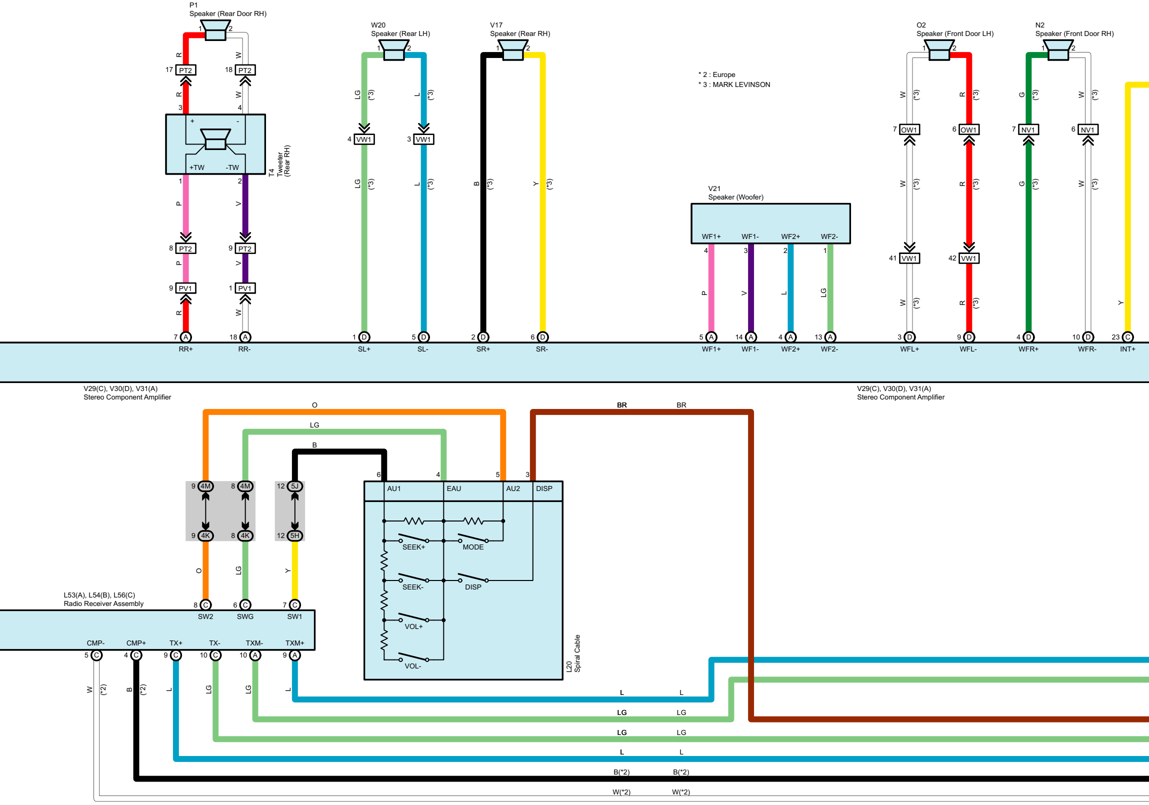
P1
Speaker (Rear Door RH)
W20
Speaker (Rear LH)
V17
Speaker (Rear RH)
O2
Speaker (Front Door LH)
N2
Speaker (Front Door RH)
T4
Tweeter
(Rear RH)
+TW
-TW
PT2
PV1
VW1
OW1
NV1
V21
Speaker (Woofer)
WF1+
WF1-
WF2+
WF2-
RR+
RR-
SL+
SL-
SR+
SR-
WFL+
WFL-
WFR+
WFR-
INT+
V29(C), V30(D), V31(A)
Stereo Component Amplifier
V29(C), V30(D), V31(A)
Stereo Component Amplifier
4M
4K
5J
5H
AU1
EAU
AU2
DISP
SEEK+
MODE
SEEK-
DISP
VOL+
VOL-
L20
Spiral Cable
L53(A), L54(B), L56(C)
Radio Receiver Assembly
SW2
SWG
SW1
CMP-
CMP+
TX+
TX-
TXM-
TXM+
O
LG
B
BR
Y
L
W(*2)
B(*2)
(*3)

* 2 : Europe
* 3 : MARK LEVINSON

* 2 : Europe
* 4 : Except 3UZ-FE
* 5 : w/ LEXUS Parking Assist (Rear View Monitor or Back Guide Monitor)

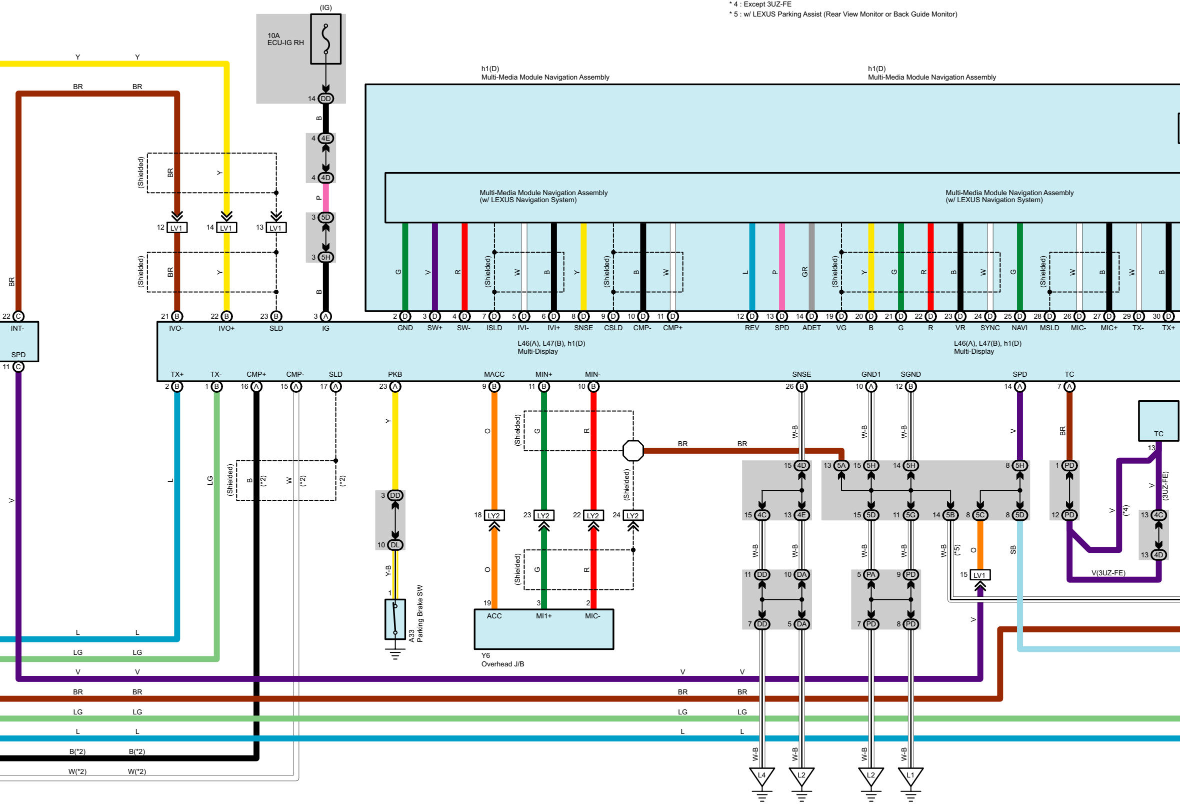
(IG)
10A
ECU-IG RH
14 DD
4 4E
4 4D
3 5D
3 5H
3 A
h1(D)
Multi-Media Module Navigation Assembly
h1(D)
Multi-Media Module Navigation Assembly
Multi-Media Module Navigation Assembly
(w/ LEXUS Navigation System)
Multi-Media Module Navigation Assembly
(w/ LEXUS Navigation System)
(Shielded)
12 LV1
14 LV1
13 LV1
22 C
INT-
SPD
11 C
21 B
IVO-
22 B
IVO+
23 B
SLD
IG
2 D GND
3 D SW+
4 D SW-
7 D ISLD
5 D IVI-
6 D IVI+
8 D SNSE
9 D CSLD
10 D CMP-
11 D CMP+
12 D REV
13 D SPD
14 D ADET
19 D VG
20 D B
21 D G
22 D R
23 D VR
24 D SYNC
25 D NAVI
28 D MSLD
26 D MIC-
27 D MIC+
29 D TX-
30 D TX+
L46(A), L47(B), h1(D)
Multi-Display
L46(A), L47(B), h1(D)
Multi-Display
TX+
TX-
CMP+
CMP-
SLD
PKB
MACC
MIN+
MIN-
SNSE
GND1
SGND
SPD
TC
2 B
1 B
16 A
15 A
17 A
23 A
9 B
11 B
10 B
26 B
10 A
12 B
14 A
7 A
(*2)
3 DD
10 DL
1
A33
Parking Brake SW
18 LY2
23 LY2
22 LY2
24 LY2
19
3
2
ACC
MI1+
MIC-
Y6
Overhead J/B
15 4D
15 4C
13 4E
11 DD
10 DA
7 DD
5 DA
13 5A
15 5H
14 5H
8 5H
15 5D
11 5G
14 5B
8 5C
8 5D
5 PA
9 PD
7 PD
8 PD
1 PD
12 PD
(*5)
15 LV1
(*4)
TC
13
(3UZ-FE)
13 4C
13 4D
V(3UZ-FE)
L4
L2
L2
L1
Y
BR
B
P
G
V
R
W
GR
SB
O
LG
L
W-B
Y-B
B(*2)
W(*2)

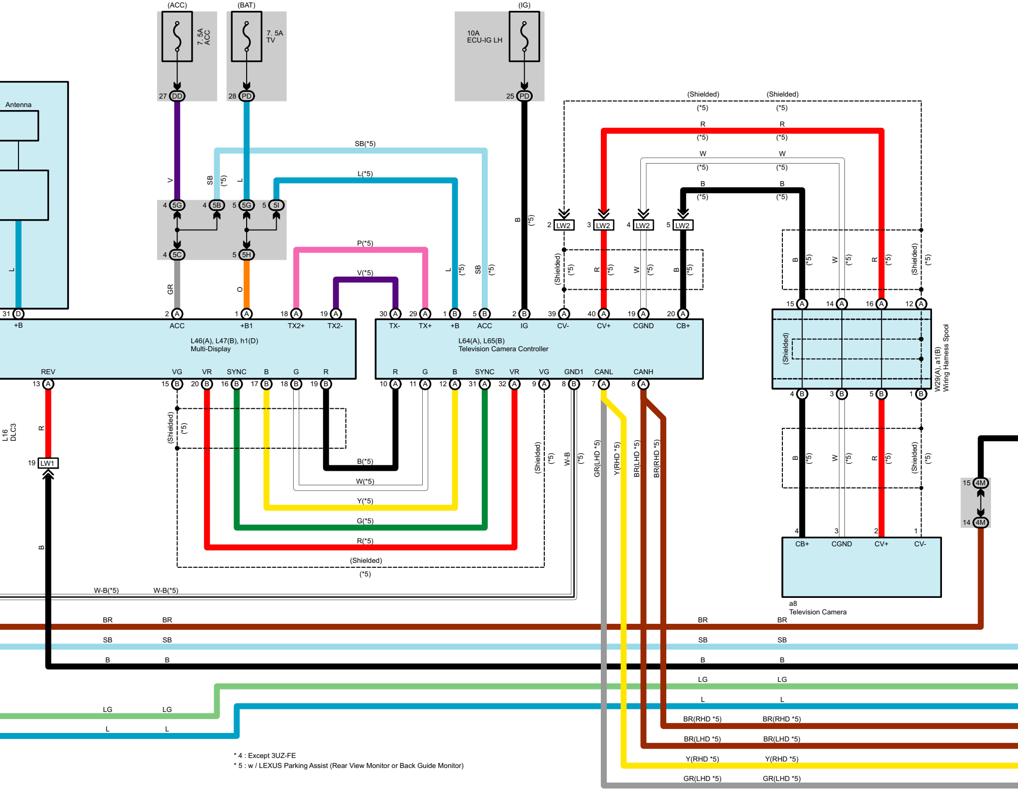
(ACC)
7. 5A
ACC
(BAT)
7. 5A
TV
(IG)
10A
ECU-IG LH
27 DD
28 PD
25 PD
Antenna
V
SB
(*5)
L
4 5G
4 5B
5 5G
5 5I
4 5C
5 5H
GR
O
L
SB(*5)
L(*5)
P(*5)
V(*5)
B
(*5)
(Shielded)
(*5)
R
(*5)
W
(*5)
B
(*5)
2 LW2
3 LW2
4 LW2
5 LW2
31 D
+B
2 A
ACC
1 A
+B1
18 A
TX2+
19 A
TX2-
L46(A), L47(B), h1(D)
Multi-Display
REV
13 A
VG
15 B
VR
20 B
SYNC
16 B
B
17 B
G
18 B
R
19 B
30 A
TX-
29 A
TX+
1 B
+B
5 B
ACC
2 B
IG
39 A
CV-
40 A
CV+
19 A
CGND
20 A
CB+
L64(A), L65(B)
Television Camera Controller
R
10 A
G
11 A
B
12 A
SYNC
31 A
VR
32 A
VG
9 A
GND1
8 B
CANL
7 A
CANH
8 A
L16
DLC3
R
19 LW1
B
B(*5)
W(*5)
Y(*5)
G(*5)
R(*5)
(Shielded)
(*5)
W-B
GR(LHD *5)
Y(RHD *5)
BR(LHD *5)
BR(RHD *5)
15 A
14 A
16 A
12 A
4 B
3 B
5 B
1 B
W29(A), a1(B)
Wiring Harness Spool
4
CB+
3
CGND
2
CV+
1
CV-
a8
Television Camera
15 4M
14 4M
W-B(*5)
W-B(*5)
BR
SB
B
LG
L
BR(RHD *5)
BR(LHD *5)
Y(RHD *5)
GR(LHD *5)

* 4 : Except 3UZ-FE
* 5 : w / LEXUS Parking Assist (Rear View Monitor or Back Guide Monitor)

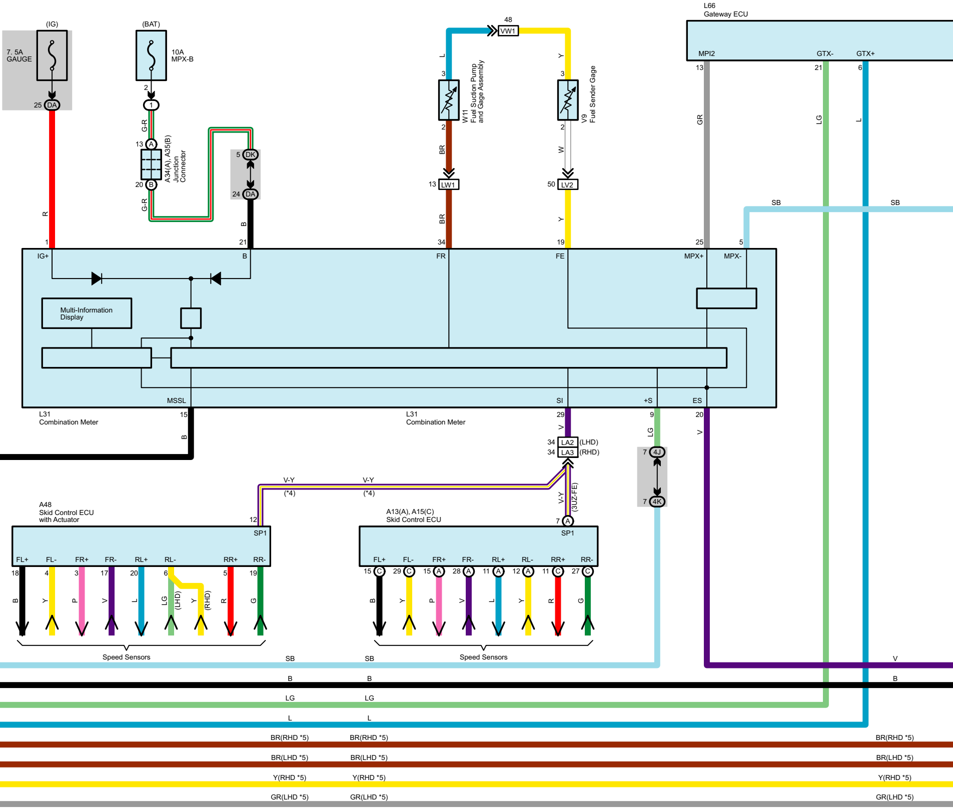
(IG)
7. 5A
GAUGE
25
DA
R
1
(BAT)
10A
MPX-B
2
1
G-R
13
A
A34(A), A35(B)
Junction
Connector
20
B
G-R
5
DK
24
DA
B
21
48
VW1
L
3
W11
Fuel Suction Pump
and Gage Assembly
2
BR
13
LW1
BR
34
Y
3
V9
Fuel Sender Gage
2
W
50
LV2
Y
19
L66
Gateway ECU
MPI2
GTX-
GTX+
13
21
6
GR
LG
L
SB
SB
25
5
IG+
B
FR
FE
MPX+
MPX-
Multi-Information
Display
MSSL
SI
+S
ES
L31
Combination Meter
15
B
L31
Combination Meter
29
V
34
LA2
(LHD)
34
LA3
(RHD)
9
LG
7
4J
7
4K
20
V
V-Y
(*4)
V-Y
(*4)
V-Y
(3UZ-FE)
A48
Skid Control ECU
with Actuator
12
SP1
FL+
FL-
FR+
FR-
RL+
RL-
RR+
RR-
18
4
3
17
20
6
5
19
B
Y
P
V
L
LG
(LHD)
Y
(RHD)
R
G
Speed Sensors
A13(A), A15(C)
Skid Control ECU
7
A
SP1
FL+
FL-
FR+
FR-
RL+
RL-
RR+
RR-
15
C
29
C
15
A
28
A
11
A
12
A
11
C
27
C
B
Y
P
V
L
Y
R
G
Speed Sensors
SB
SB
V
B
B
B
LG
LG
L
L
BR(RHD *5)
BR(RHD *5)
BR(RHD *5)
BR(LHD *5)
BR(LHD *5)
BR(LHD *5)
Y(RHD *5)
Y(RHD *5)
Y(RHD *5)
GR(LHD *5)
GR(LHD *5)
GR(LHD *5)

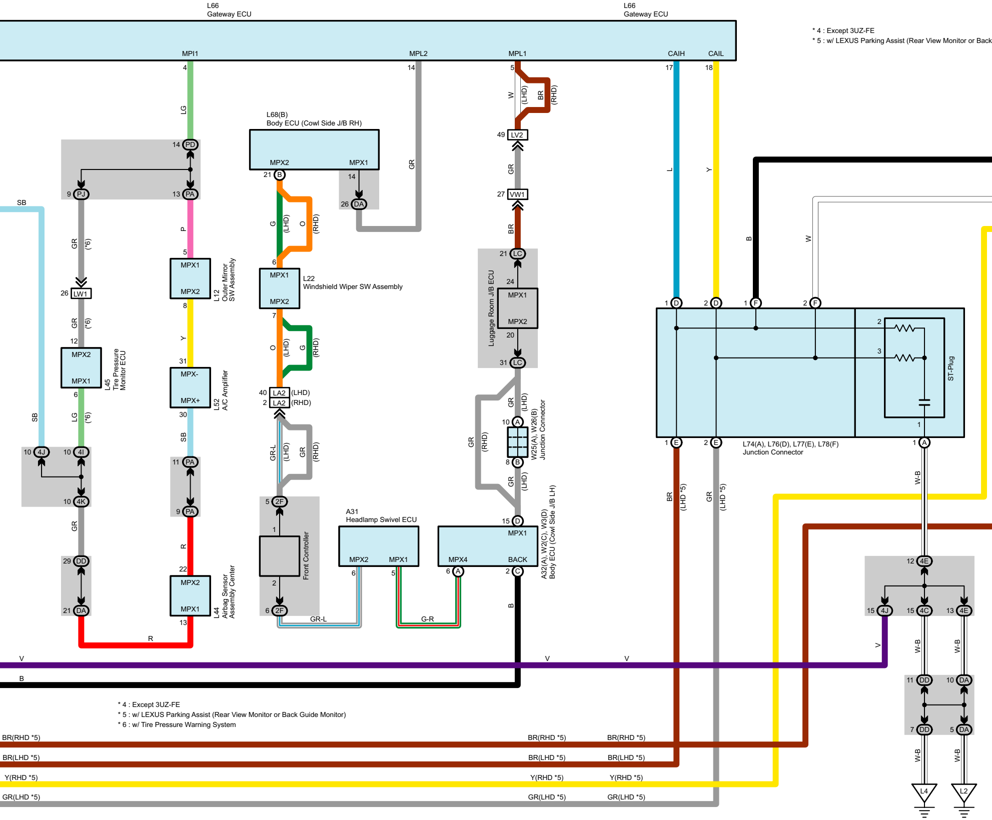
L66
Gateway ECU
MPI1
MPL2
MPL1
CAIH
CAIL
L68(B)
Body ECU (Cowl Side J/B RH)
MPX2
MPX1
L22
Windshield Wiper SW Assembly
L12
Outer Mirror SW Assembly
L45
Tire Pressure Monitor ECU
L52
A/C Amplifier
MPX-
MPX+
L44
Airbag Sensor Assembly Center
Front Controller
A31
Headlamp Swivel ECU
A32(A), W2(C), W3(D)
Body ECU (Cowl Side J/B LH)
MPX4
BACK
Luggage Room J/B ECU
W25(A), W26(B)
Junction Connector
L74(A), L76(D), L77(E), L78(F)
Junction Connector
ST-Plug
LV2
VW1
LW1
LA2
(LHD)
(RHD)
(*6)
(LHD *5)
LG
GR
P
Y
SB
R
G
O
BR
W
L
B
V
W-B
GR-L
G-R
BR(RHD *5)
BR(LHD *5)
Y(RHD *5)
GR(LHD *5)
L4
L2

* 4 : Except 3UZ-FE
* 5 : w/ LEXUS Parking Assist (Rear View Monitor or Back

* 4 : Except 3UZ-FE
* 5 : w/ LEXUS Parking Assist (Rear View Monitor or Back Guide Monitor)
* 6 : w/ Tire Pressure Warning System

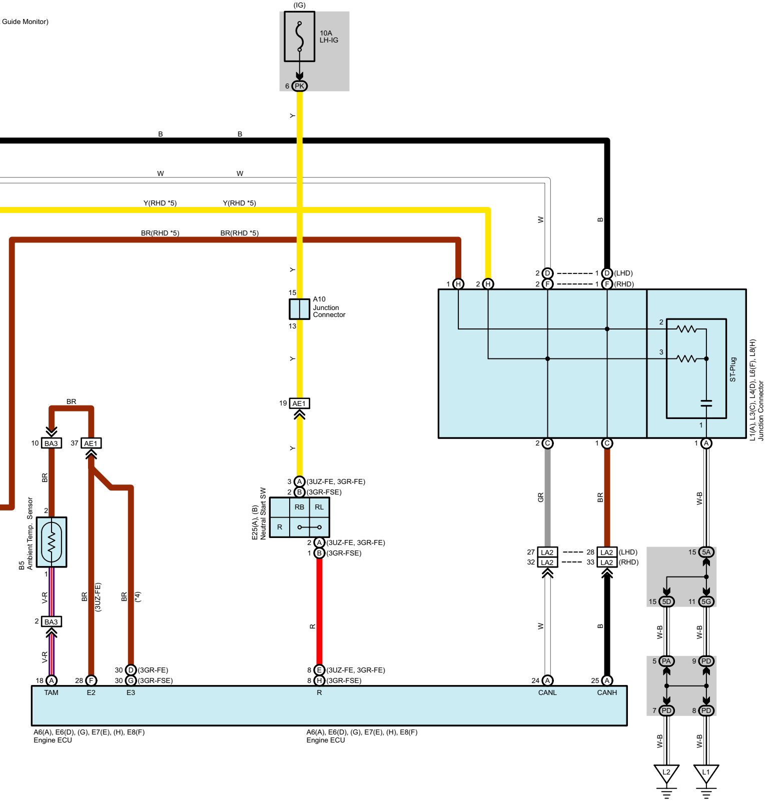
Guide Monitor)
(IG)
10A
LH-IG
6 PK
Y
B
B
W
W
Y(RHD *5)
Y(RHD *5)
BR(RHD *5)
BR(RHD *5)
15
A10
Junction
Connector
13
19 AE1
W
B
2 D
1 D (LHD)
2 F
1 F (RHD)
1 H
2 H
2
3
ST-Plug
1
L1(A), L3(C), L4(D), L6(F), L8(H)
Junction Connector
2 C
1 C
1 A
GR
BR
W-B
BR
10 BA3
37 AE1
BR
2
B5
Ambient Temp. Sensor
1
V-R
2 BA3
V-R
BR
(3UZ-FE)
BR
(*4)
3 A (3UZ-FE, 3GR-FE)
2 B (3GR-FSE)
E25(A), (B)
Neutral Start SW
RB
RL
R
2 A (3UZ-FE, 3GR-FE)
1 B (3GR-FSE)
R
27 LA2
28 LA2 (LHD)
32 LA2
33 LA2 (RHD)
W
B
15 5A
15 5D
11 5G
W-B
W-B
5 PA
9 PD
7 PD
8 PD
W-B
W-B
L2
L1
18 A
28 F
30 D (3GR-FE)
30 G (3GR-FSE)
8 E (3UZ-FE, 3GR-FE)
8 H (3GR-FSE)
24 A
25 A
TAM
E2
E3
R
CANL
CANH
A6(A), E6(D), (G), E7(E), (H), E8(F)
Engine ECU
A6(A), E6(D), (G), E7(E), (H), E8(F)
Engine ECU