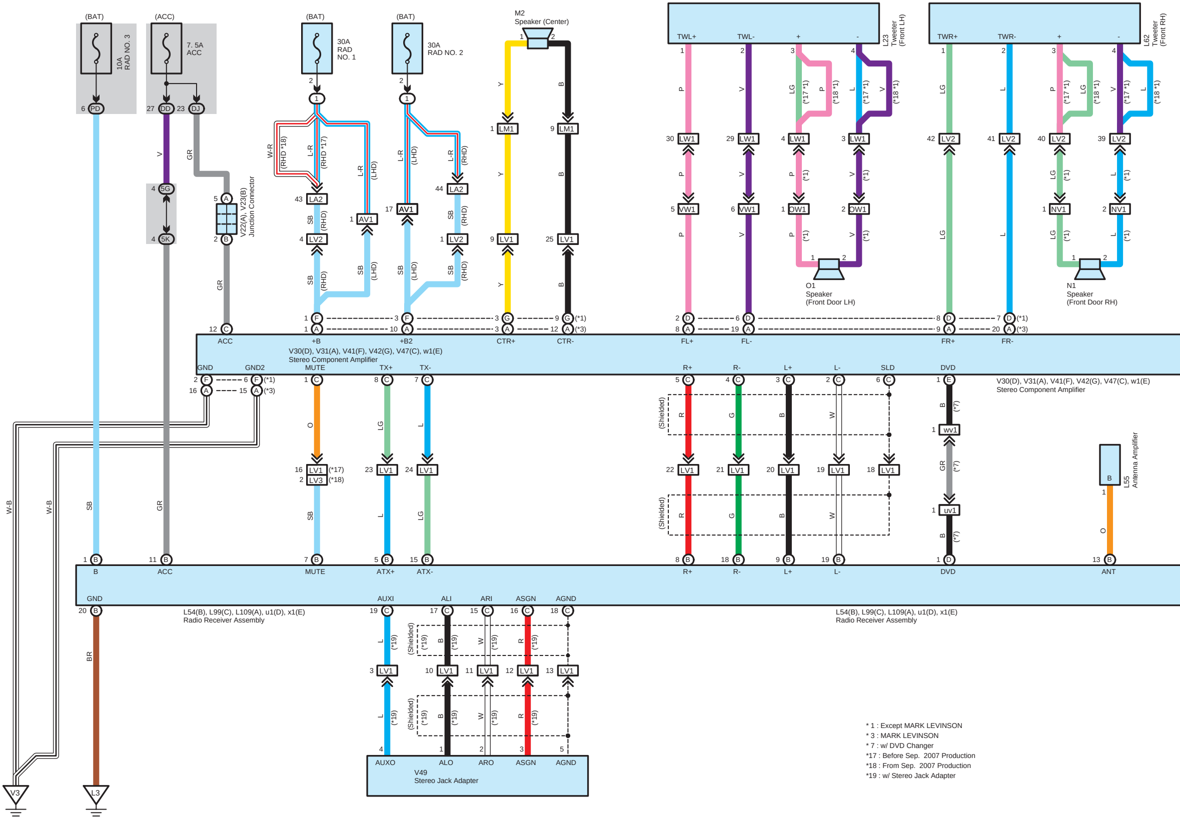
(BAT)
10A RAD NO. 3
(ACC)
7. 5A ACC
30A RAD NO. 1
30A RAD NO. 2
M2 Speaker (Center)
L23 Tweeter (Front LH)
TWL+
TWL-
+
-
L62 Tweeter (Front RH)
TWR+
TWR-
PD
DD
DJ
5G
5K
V22(A), V23(B) Junction Connector
LA2
AV1
LV2
LM1
LV1
LW1
VW1
DW1
LV2
NV1
O1 Speaker (Front Door LH)
N1 Speaker (Front Door RH)
(RHD *18)
(RHD *17)
(LHD)
(RHD)
(*17 *1)
(*18 *1)
(*1)
(*3)
W-R
L-R
SB
GR
V
Y
B
P
LG
L
ACC
+B
+B2
CTR+
CTR-
FL+
FL-
FR+
FR-
V30(D), V31(A), V41(F), V42(G), V47(C), w1(E)
Stereo Component Amplifier
GND
GND2
MUTE
TX+
TX-
R+
R-
L+
L-
SLD
DVD
(Shielded)
R
G
W
O
LV3
(*17)
(*18)
(*7)
wv1
uv1
L55 Antenna Amplifier
B
ANT
ATX+
ATX-
L54(B), L99(C), L109(A), u1(D), x1(E)
Radio Receiver Assembly
AUXI
ALI
ARI
ASGN
AGND
(*19)
BR
W-B
V3
L3
AUXO
ALO
ARO
V49
Stereo Jack Adapter

* 1 : Except MARK LEVINSON
* 3 : MARK LEVINSON
* 7 : w/ DVD Changer
*17 : Before Sep. 2007 Production
*18 : From Sep. 2007 Production
*19 : w/ Stereo Jack Adapter

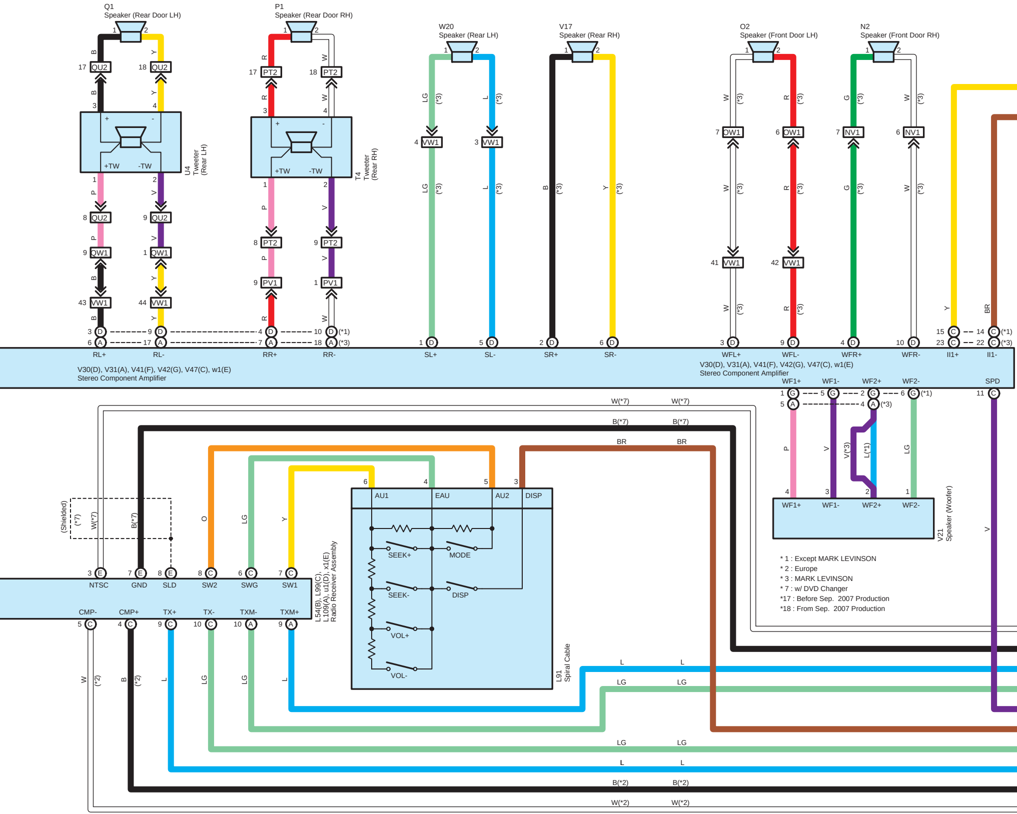
Q1
Speaker (Rear Door LH)
P1
Speaker (Rear Door RH)
W20
Speaker (Rear LH)
V17
Speaker (Rear RH)
O2
Speaker (Front Door LH)
N2
Speaker (Front Door RH)
U4
Tweeter
(Rear LH)
T4
Tweeter
(Rear RH)
+TW
-TW
QU2
PT2
QW1
VW1
PV1
OW1
NV1
RL+
RL-
RR+
RR-
SL+
SL-
SR+
SR-
WFL+
WFL-
WFR+
WFR-
II1+
II1-
V30(D), V31(A), V41(F), V42(G), V47(C), w1(E)
Stereo Component Amplifier
WF1+
WF1-
WF2+
WF2-
SPD
V21
Speaker (Woofer)
(*1)
(*3)
W(*7)
B(*7)
BR
(Shielded)
(*7)
AU1
EAU
AU2
DISP
SEEK+
MODE
SEEK-
DISP
VOL+
VOL-
L91
Spiral Cable
L54(B), L99(C), L109(A), u1(D), x1(E)
Radio Receiver Assembly
NTSC
GND
SLD
SW2
SWG
SW1
CMP-
CMP+
TX+
TX-
TXM-
TXM+
O
LG
Y
L
W
B
(*2)
B(*2)
W(*2)
V(*3)
L(*1)
P
V
R
G

*1 : Except MARK LEVINSON
*2 : Europe
*3 : MARK LEVINSON
*7 : w/ DVD Changer
*17 : Before Sep. 2007 Production
*18 : From Sep. 2007 Production

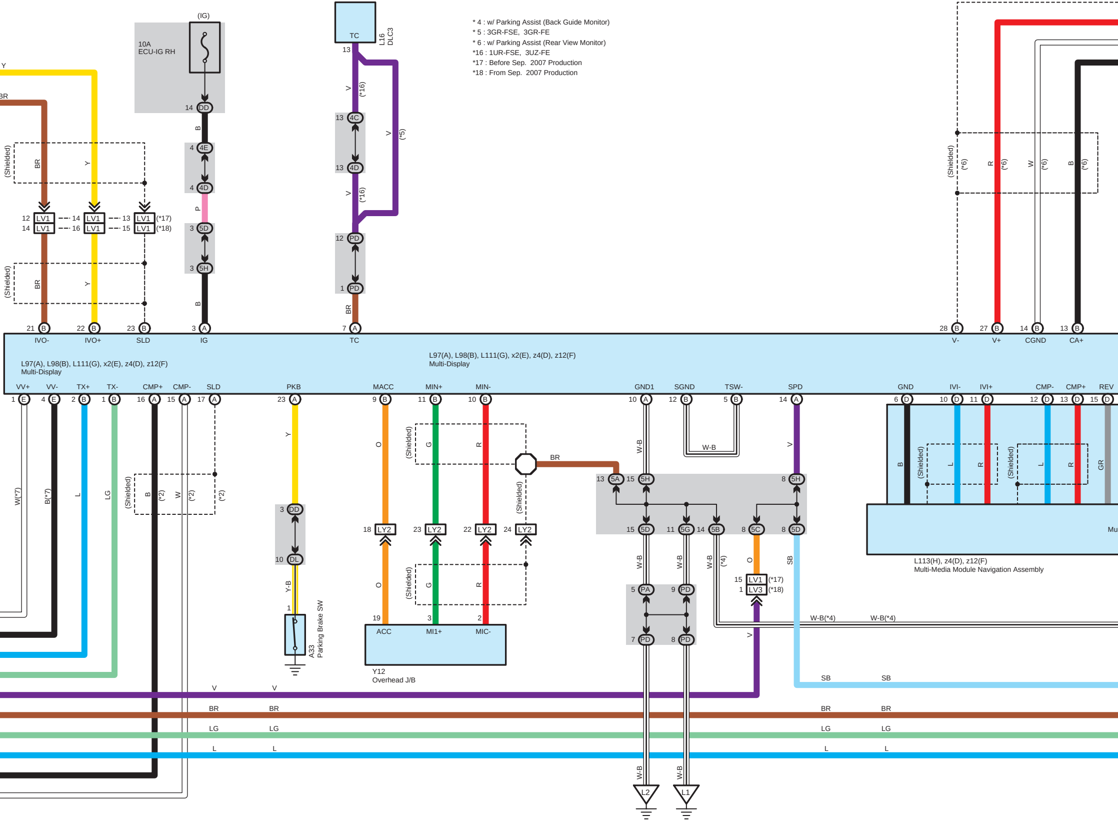
(IG)
10A
ECU-IG RH
TC
L16
DLC3
Y
BR
(Shielded)
14 DD
B
4 4E
4 4D
P
3 5D
3 5H
13
V (*16)
13 4C
13 4D
V (*5)
12 PD
1 PD
12 LV1 14 LV1 13 LV1 (*17)
14 LV1 16 LV1 15 LV1 (*18)
21 B IVO-
22 B IVO+
23 B SLD
3 A IG
7 A TC
28 B V-
27 B V+
14 B CGND
13 B CA+
R
W
(*6)
L97(A), L98(B), L111(G), x2(E), z4(D), z12(F)
Multi-Display
VV+ VV- TX+ TX- CMP+ CMP- SLD PKB MACC MIN+ MIN- GND1 SGND TSW- SPD GND IVI- IVI+ CMP- CMP+ REV
1 E 4 E 2 B 1 B 16 A 15 A 17 A 23 A 9 B 11 B 10 B 10 A 12 B 5 B 14 A 6 D 10 D 11 D 12 D 13 D 15 D
W(*7)
B(*7)
L
LG
(*2)
O
G
W-B
SB
GR
3 DD
10 DL
Y-B
1
A33
Parking Brake SW
18 LY2 23 LY2 22 LY2 24 LY2
19 3 2
ACC MI1+ MIC-
Y12
Overhead J/B
13 5A 15 5H 8 5H
15 5D 11 5G 14 5B 8 5C 8 5D
(*4)
15 LV1 (*17)
1 LV3 (*18)
5 PA 9 PD
7 PD 8 PD
W-B(*4)
L2
L1
Mu
L113(H), z4(D), z12(F)
Multi-Media Module Navigation Assembly

* 4 : w/ Parking Assist (Back Guide Monitor)
* 5 : 3GR-FSE, 3GR-FE
* 6 : w/ Parking Assist (Rear View Monitor)
*16 : 1UR-FSE, 3UZ-FE
*17 : Before Sep. 2007 Production
*18 : From Sep. 2007 Production

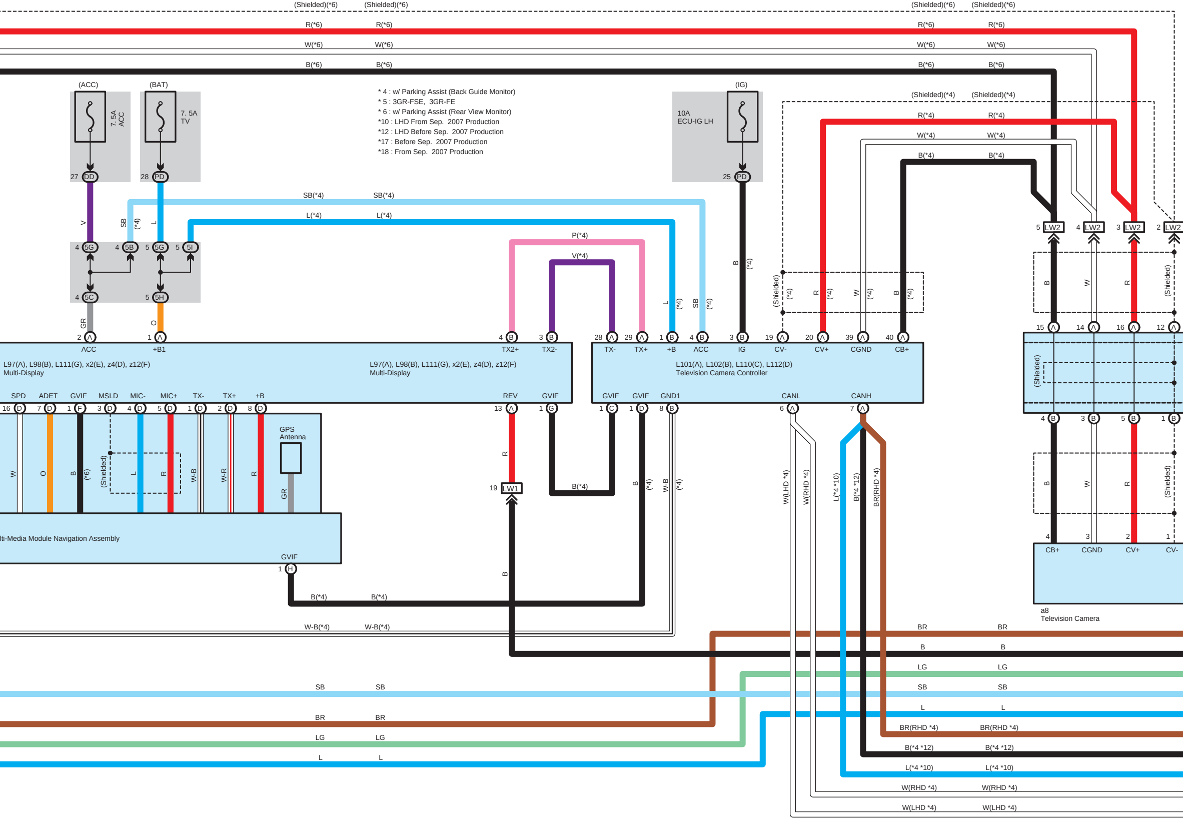

* 4 : w/ Parking Assist (Back Guide Monitor)
* 5 : 3GR-FSE, 3GR-FE
* 6 : w/ Parking Assist (Rear View Monitor)
*10 : LHD From Sep. 2007 Production
*12 : LHD Before Sep. 2007 Production
*17 : Before Sep. 2007 Production
*18 : From Sep. 2007 Production

(Shielded)(*6)
(Shielded)(*6)
(Shielded)(*6)
(Shielded)(*6)
R(*6)
W(*6)
B(*6)
(ACC)
7.5A ACC
(BAT)
7. 5A TV
(IG)
10A ECU-IG LH
27 DD
28 PD
25 PD
(Shielded)(*4)
R(*4)
W(*4)
B(*4)
SB(*4)
L(*4)
P(*4)
V(*4)
V
SB (*4)
L
4 5G
4 5B
5 5G
5 5I
4 5C
5 5H
GR
O
LW2
2 A ACC
1 A +B1
4 B TX2+
3 B TX2-
28 A TX-
29 A TX+
1 B +B
4 B ACC
3 B IG
19 A CV-
20 A CV+
39 A CGND
40 A CB+
15 A
14 A
16 A
12 A
(Shielded)
L97(A), L98(B), L111(G), x2(E), z4(D), z12(F)
Multi-Display
L97(A), L98(B), L111(G), x2(E), z4(D), z12(F)
Multi-Display
L101(A), L102(B), L110(C), L112(D)
Television Camera Controller
SPD
ADET
GVIF
MSLD
MIC-
MIC+
TX-
TX+
+B
REV
GVIF
GVIF
GVIF
GND1
CANL
CANH
16 D
7 D
1 F
3 D
4 D
5 D
1 D
2 D
8 D
13 A
1 G
1 C
1 D
8 B
6 A
7 A
4 B
3 B
5 B
1 B
W
O
B
(*6)
L
R
W-B
W-R
GPS Antenna
GR
19 LW1
B(*4)
W-B
W(LHD *4)
W(RHD *4)
L(*4 *10)
B(*4 *12)
BR(RHD *4)
CB+
CGND
CV+
CV-
a8
Television Camera
Multi-Media Module Navigation Assembly
1 H GVIF
W-B(*4)
BR
B
LG
SB
L
BR(RHD *4)
B(*4 *12)
L(*4 *10)
W(RHD *4)
W(LHD *4)

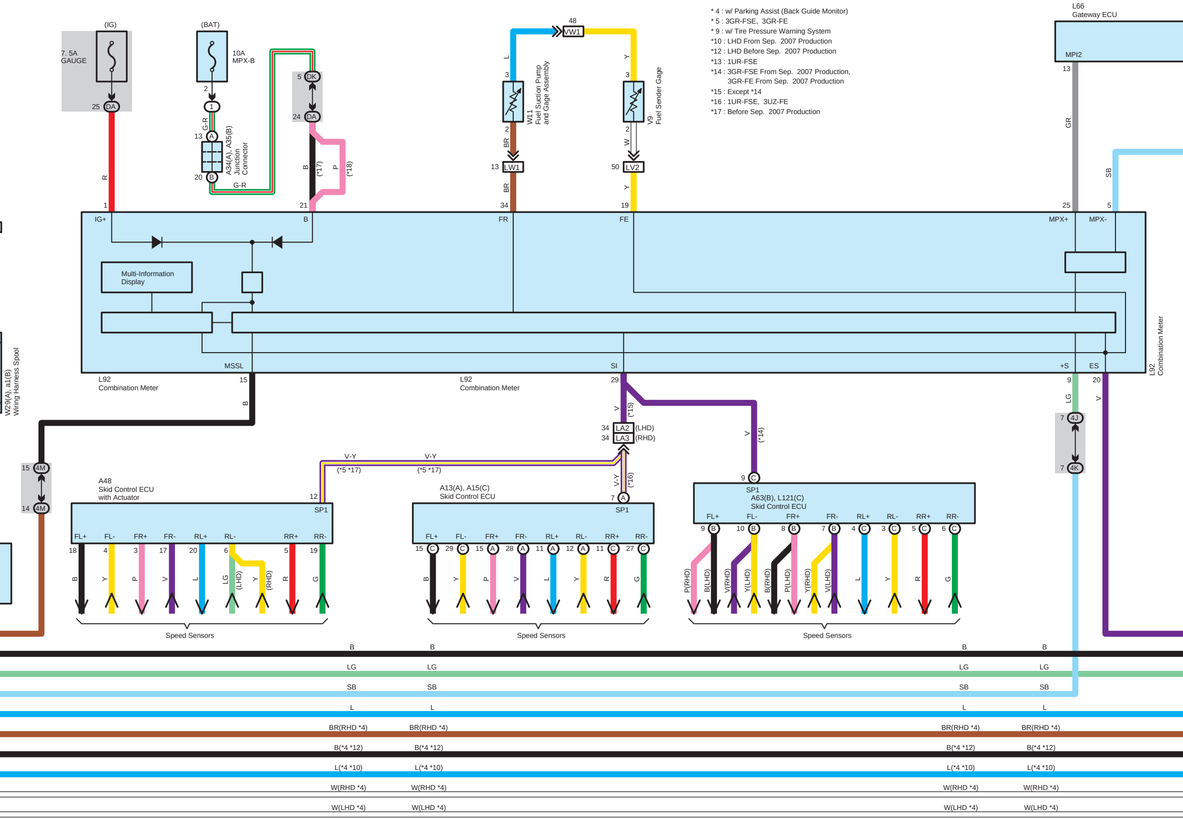
(IG)
7. 5A
GAUGE
25 DA
(BAT)
10A
MPX-B
2
1
G-R
13 A
A34(A), A35(B)
Junction
Connector
20 B
G-R
5 DK
24 DA
B
(*17)
P
(*18)
R
1
21
48
VW1
L
Y
3
3
W11
Fuel Suction Pump
and Gage Assembly
V9
Fuel Sender Gage
2
2
BR
W
13 LW1
50 LV2
BR
Y
34
19
L66
Gateway ECU
MPI2
13
GR
SB
25
5
IG+
B
FR
FE
MPX+
MPX-
Multi-Information
Display
MSSL
SI
+S
ES
L92
Combination Meter
L92
Combination Meter
L92
Combination Meter
15
29
9
20
B
V
(*15)
V
(*14)
LG
V
34 LA2 (LHD)
34 LA3 (RHD)
7 4J
7 4K
W29(A), a1(B)
Wiring Harness Spool
15 4M
14 4M
V-Y
(*5 *17)
V-Y
(*5 *17)
V-Y
(*16)
A48
Skid Control ECU
with Actuator
12
SP1
FL+ FL- FR+ FR- RL+ RL- RR+ RR-
18 4 3 17 20 6 5 19
B Y P V L LG (LHD) Y (RHD) R G
A13(A), A15(C)
Skid Control ECU
7 A
SP1
FL+ FL- FR+ FR- RL+ RL- RR+ RR-
15 C 29 C 15 A 28 A 11 A 12 A 11 C 27 C
B Y P V L Y R G
9 C
SP1
A63(B), L121(C)
Skid Control ECU
FL+ FL- FR+ FR- RL+ RL- RR+ RR-
9 B 10 B 8 B 7 B 4 C 3 C 5 C 6 C
P(RHD) B(LHD) V(RHD) Y(LHD) B(RHD) P(LHD) Y(RHD) V(LHD) L Y R G
Speed Sensors
Speed Sensors
Speed Sensors
B
LG
SB
L
BR(RHD *4)
B(*4 *12)
L(*4 *10)
W(RHD *4)
W(LHD *4)

* 4 : w/ Parking Assist (Back Guide Monitor)
* 5 : 3GR-FSE, 3GR-FE
* 9 : w/ Tire Pressure Warning System
*10 : LHD From Sep. 2007 Production
*12 : LHD Before Sep. 2007 Production
*13 : 1UR-FSE
*14 : 3GR-FSE From Sep. 2007 Production,
3GR-FE From Sep. 2007 Production
*15 : Except *14
*16 : 1UR-FSE, 3UZ-FE
*17 : Before Sep. 2007 Production

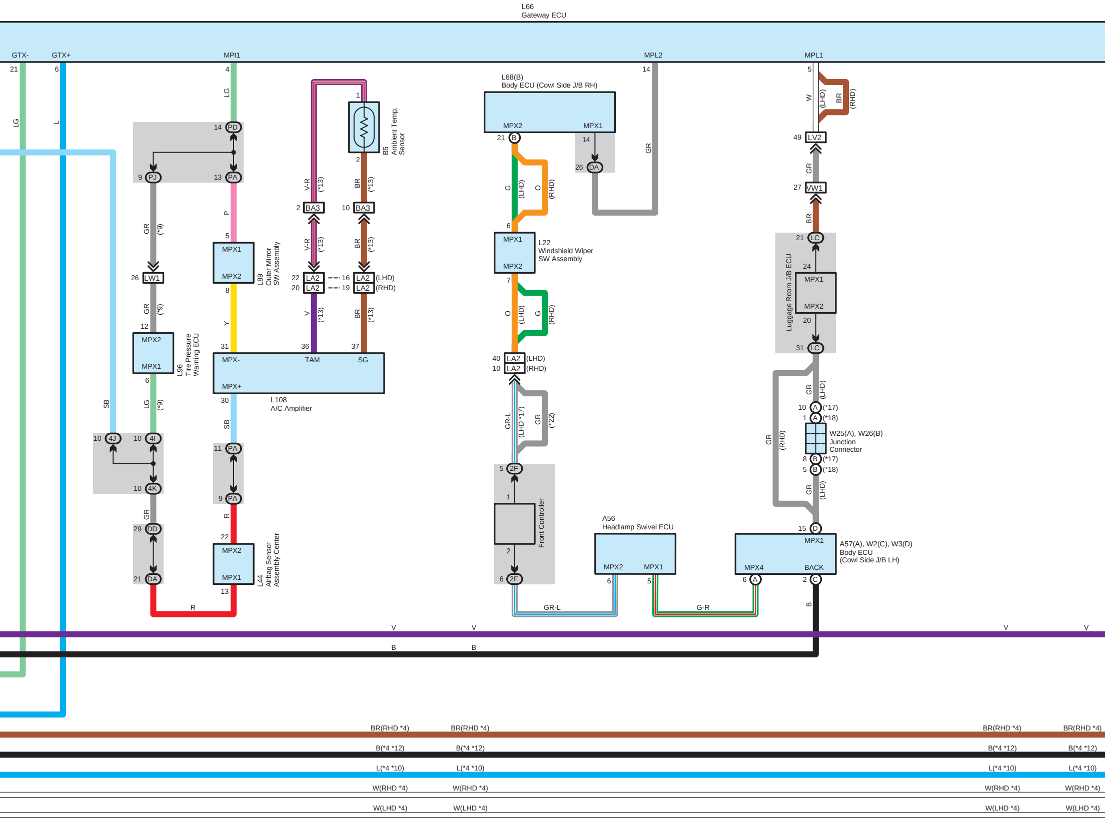
L66
Gateway ECU
GTX-
GTX+
MPI1
MPL2
MPL1
21
6
4
14
5
LG
L
LG
W
(LHD)
BR
(RHD)
L68(B)
Body ECU (Cowl Side J/B RH)
MPX2
MPX1
21 B
14
26 DA
GR
49 LV2
GR
27 VW1
BR
1
B5
Ambient Temp.
Sensor
2
V-R
(*13)
BR
(*13)
2 BA3
10 BA3
V-R
(*13)
BR
(*13)
14 PD
9 PJ
13 PA
GR
(*9)
P
5
MPX1
MPX2
L89
Outer Mirror
SW Assembly
8
26 LW1
GR
(*9)
12
MPX2
MPX1
L96
Tire Pressure
Warning ECU
6
LG
(*9)
Y
22 LA2
20 LA2
16 LA2 (LHD)
19 LA2 (RHD)
V
(*13)
BR
(*13)
31
36
37
MPX-
TAM
SG
MPX+
L108
A/C Amplifier
30
SB
SB
G
(LHD)
O
(RHD)
6
MPX1
MPX2
L22
Windshield Wiper
SW Assembly
7
O
(LHD)
G
(RHD)
40 LA2 (LHD)
10 LA2 (RHD)
GR-L
(LHD *17)
GR
(*22)
21 LC
24
MPX1
MPX2
20
31 LC
Luggage Room J/B ECU
GR
(LHD)
10 A (*17)
1 A (*18)
W25(A), W26(B)
Junction
Connector
8 B (*17)
5 B (*18)
GR
(LHD)
GR
(RHD)
10 4J
10 4I
10 4K
GR
29 DD
21 DA
11 PA
9 PA
R
22
MPX2
MPX1
L44
Airbag Sensor
Assembly Center
13
R
5 2F
1
Front Controller
2
6 2F
A56
Headlamp Swivel ECU
MPX2
MPX1
6
5
GR-L
G-R
15 D
MPX1
A57(A), W2(C), W3(D)
Body ECU
(Cowl Side J/B LH)
MPX4
BACK
6 A
2 C
B
V
V
V
V
B
B
BR(RHD *4)
BR(RHD *4)
BR(RHD *4)
BR(RHD *4)
B(*4 *12)
B(*4 *12)
B(*4 *12)
B(*4 *12)
L(*4 *10)
L(*4 *10)
L(*4 *10)
L(*4 *10)
W(RHD *4)
W(RHD *4)
W(RHD *4)
W(RHD *4)
W(LHD *4)
W(LHD *4)
W(LHD *4)
W(LHD *4)

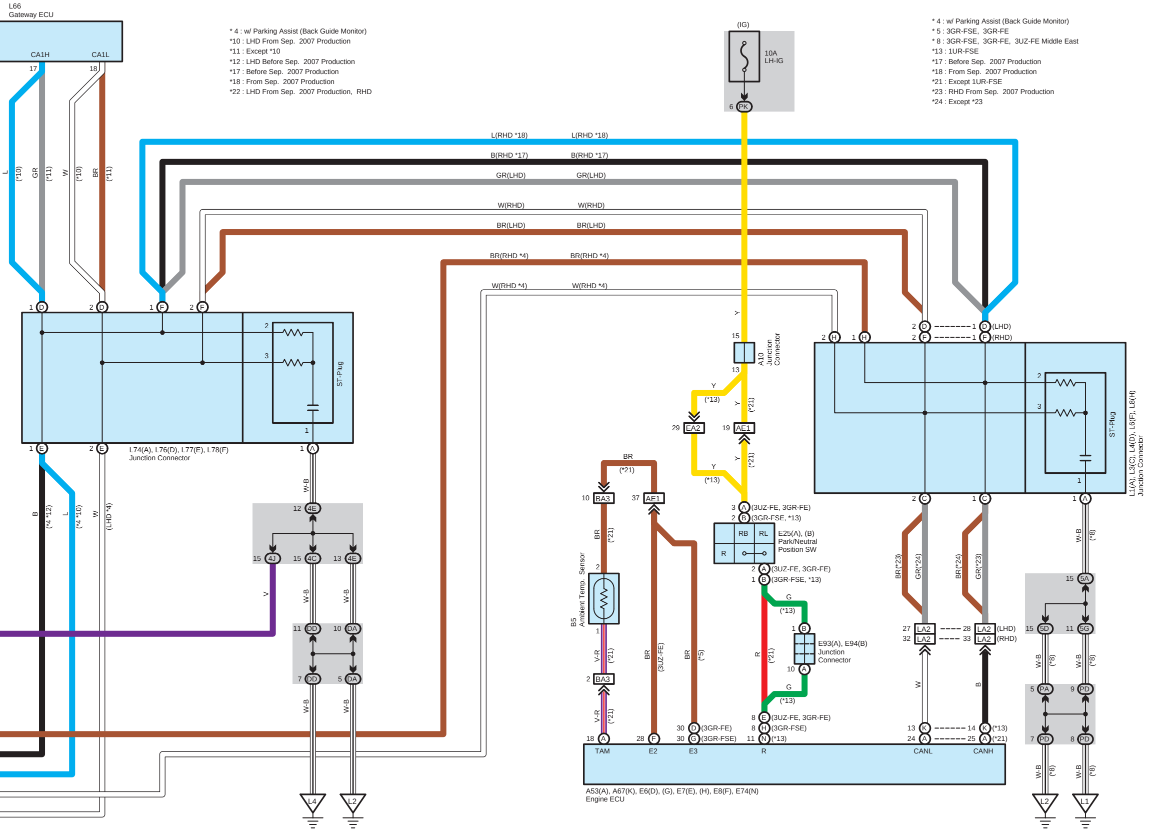

* 4 : w/ Parking Assist (Back Guide Monitor)
*10 : LHD From Sep. 2007 Production
*11 : Except *10
*12 : LHD Before Sep. 2007 Production
*17 : Before Sep. 2007 Production
*18 : From Sep. 2007 Production
*22 : LHD From Sep. 2007 Production, RHD

* 4 : w/ Parking Assist (Back Guide Monitor)
* 5 : 3GR-FSE, 3GR-FE
* 8 : 3GR-FSE, 3GR-FE, 3UZ-FE Middle East
*13 : 1UR-FSE
*17 : Before Sep. 2007 Production
*18 : From Sep. 2007 Production
*21 : Except 1UR-FSE
*23 : RHD From Sep. 2007 Production
*24 : Except *23

L66
Gateway ECU
CA1H
CA1L
17
18
L (*10)
GR (*11)
W (*10)
BR (*11)
(IG)
10A
LH-IG
6 PK
L(RHD *18)
B(RHD *17)
GR(LHD)
W(RHD)
BR(LHD)
BR(RHD *4)
W(RHD *4)
1 D
2 D
1 F
2 F
ST-Plug
L74(A), L76(D), L77(E), L78(F)
Junction Connector
1 E
2 E
1 A
B (*4 *12)
L (*4 *10)
W (LHD *4)
W-B
12 4E
15 4J
15 4C
13 4E
V
11 DD
10 DA
7 DD
5 DA
L4
L2
Y
15
A10
Junction
Connector
13
Y (*13)
Y (*21)
29 EA2
19 AE1
BR (*21)
10 BA3
37 AE1
3 A (3UZ-FE, 3GR-FE)
2 B (3GR-FSE, *13)
RB
RL
R
E25(A), (B)
Park/Neutral
Position SW
2 A (3UZ-FE, 3GR-FE)
1 B (3GR-FSE, *13)
G (*13)
R (*21)
1 B
E93(A), E94(B)
Junction
Connector
10 A
8 E (3UZ-FE, 3GR-FE)
8 H (3GR-FSE)
11 N (*13)
B5
Ambient Temp. Sensor
V-R (*21)
2 BA3
BR (3UZ-FE)
BR (*5)
30 D (3GR-FE)
30 G (3GR-FSE)
18 A
28 F
TAM
E2
E3
R
CANL
CANH
A53(A), A67(K), E6(D), (G), E7(E), (H), E8(F), E74(N)
Engine ECU
2 H
1 H
2 D — 1 D (LHD)
2 F — 1 F (RHD)
L1(A), L3(C), L4(D), L6(F), L8(H)
Junction Connector
2 C
1 C
1 A
BR(*23)
GR(*24)
BR(*24)
GR(*23)
27 LA2 — 28 LA2 (LHD)
32 LA2 — 33 LA2 (RHD)
W
B
13 K — 14 K (*13)
24 A — 25 A (*21)
W-B (*8)
15 5A
15 5D
11 5G
5 PA
9 PD
7 PD
8 PD
L2
L1