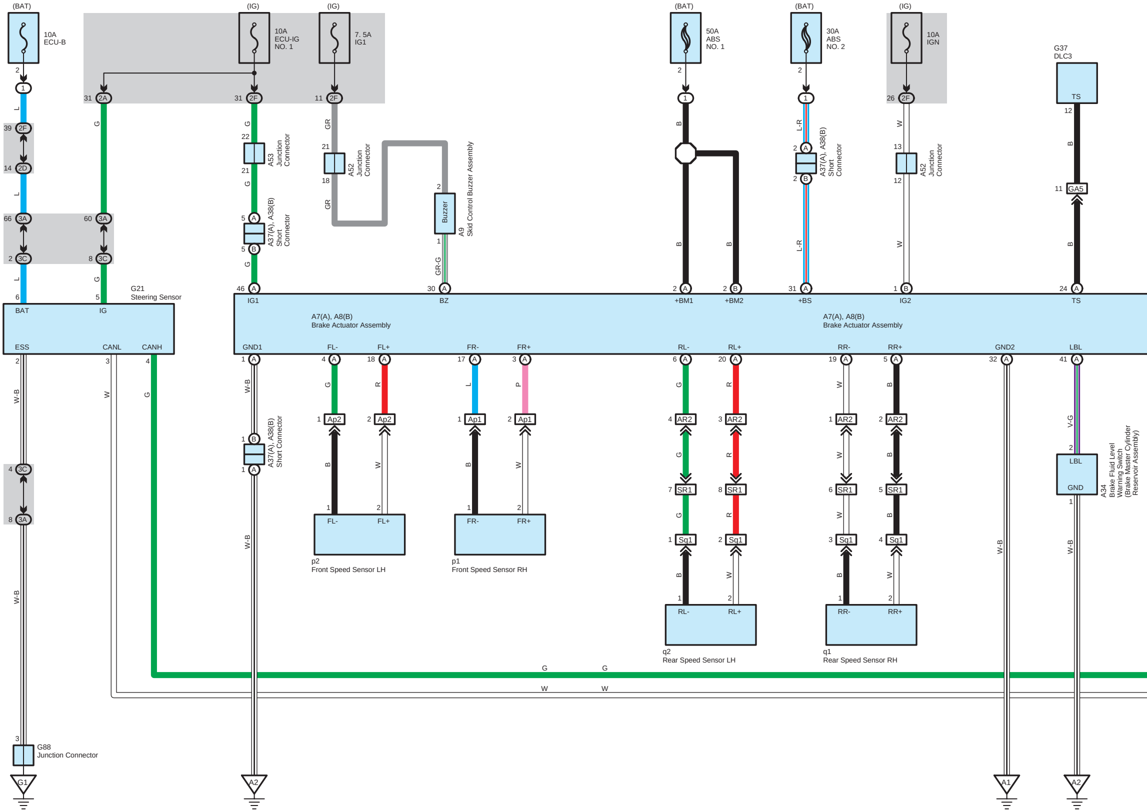
(BAT)
10A
ECU-B
(IG)
10A
ECU-IG
NO. 1
(IG)
7. 5A
IG1
(BAT)
50A
ABS
NO. 1
(BAT)
30A
ABS
NO. 2
(IG)
10A
IGN
G37
DLC3
TS
2A
2F
2D
3A
3C
A53
Junction
Connector
A52
Junction
Connector
A37(A), A38(B)
Short
Connector
A9
Skid Control Buzzer Assembly
Buzzer
GA5
G21
Steering Sensor
BAT
IG
ESS
CANL
CANH
IG1
BZ
+BM1
+BM2
+BS
IG2
TS
A7(A), A8(B)
Brake Actuator Assembly
A7(A), A8(B)
Brake Actuator Assembly
GND1
FL-
FL+
FR-
FR+
RL-
RL+
RR-
RR+
GND2
LBL
Ap2
Ap1
AR2
SR1
Sq1
p2
Front Speed Sensor LH
p1
Front Speed Sensor RH
q2
Rear Speed Sensor LH
q1
Rear Speed Sensor RH
A34
Brake Fluid Level
Warning Switch
(Brake Master Cylinder
Reservoir Assembly)
LBL
GND
G88
Junction Connector
A37(A), A38(B)
Short Connector
G1
A2
A1
A2
L
G
GR
GR-G
B
L-R
W
W-B
R
P
V-G
G
W

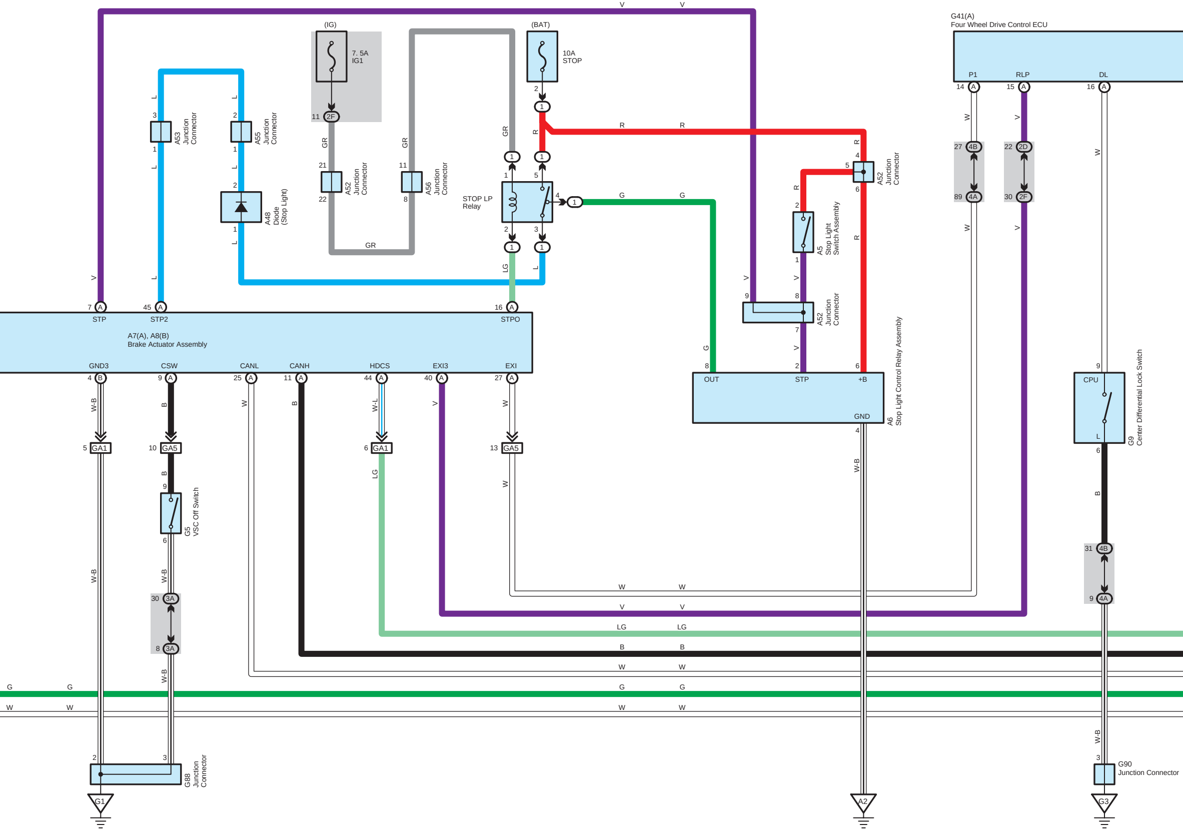

(IG)
7. 5A
IG1
11 2F
(BAT)
10A
STOP
2
1
R
R R
GR
A53 Junction Connector
A55 Junction Connector
A52 Junction Connector
A56 Junction Connector
A48 Diode (Stop Light)
STOP LP Relay
1 5 4 2 3
G G
V V
L
LG
A5 Stop Light Switch Assembly
A52 Junction Connector
G41(A)
Four Wheel Drive Control ECU
P1
RLP
DL
14 A
15 A
16 A
W
V
27 4B
89 4A
22 2D
30 2F
7 A
45 A
16 A
STP
STP2
STPO
A7(A), A8(B)
Brake Actuator Assembly
GND3
CSW
CANL
CANH
HDCS
EXI3
EXI
4 B
9 A
25 A
11 A
44 A
40 A
27 A
W-B
B
W-L
5 GA1
10 GA5
6 GA1
13 GA5
G5 VSC Off Switch
9
6
30 3A
8 3A
OUT
STP
+B
GND
8 2 6 4
A6 Stop Light Control Relay Assembly
CPU
L
9
6
G9 Center Differential Lock Switch
31 4B
9 4A
W W
V V
LG LG
B B
W W
G G G G
W W W W
2 3
G88 Junction Connector
G90 Junction Connector
G1
A2
G3

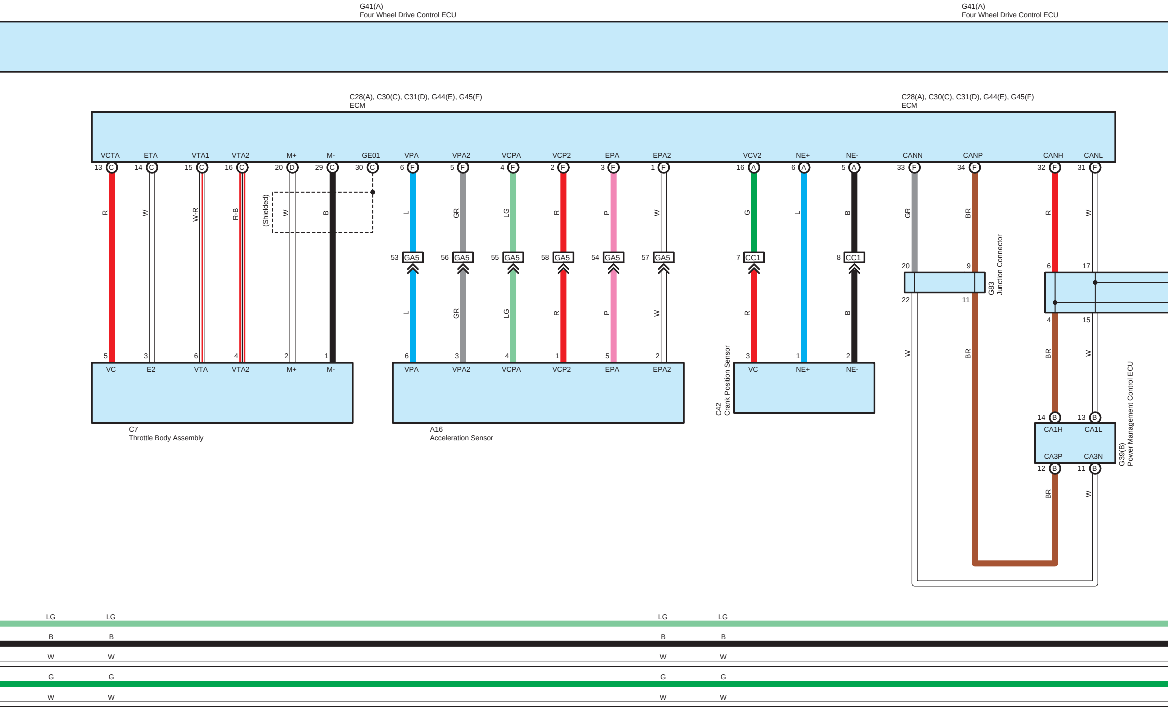
G41(A)
Four Wheel Drive Control ECU
G41(A)
Four Wheel Drive Control ECU
C28(A), C30(C), C31(D), G44(E), G45(F)
ECM
C28(A), C30(C), C31(D), G44(E), G45(F)
ECM
VCTA
ETA
VTA1
VTA2
M+
M-
GE01
VPA
VPA2
VCPA
VCP2
EPA
EPA2
VCV2
NE+
NE-
CANN
CANP
CANH
CANL
13 C
14 C
15 C
16 C
20 D
29 C
30 C
6 F
5 F
4 F
2 F
3 F
1 F
16 A
6 A
5 A
33 F
34 F
32 F
31 F
R
W
W-R
R-B
(Shielded)
W
B
L
GR
LG
R
P
W
G
L
B
GR
BR
R
W
53 GA5
56 GA5
55 GA5
58 GA5
54 GA5
57 GA5
7 CC1
8 CC1
20
9
22
11
G83
Junction Connector
6
17
4
15
L
GR
LG
R
P
W
R
B
W
BR
BR
W
5
3
6
4
2
1
VC
E2
VTA
VTA2
M+
M-
C7
Throttle Body Assembly
6
3
4
1
5
2
VPA
VPA2
VCPA
VCP2
EPA
EPA2
A16
Acceleration Sensor
3
1
2
VC
NE+
NE-
C42
Crank Position Sensor
14 B
13 B
CA1H
CA1L
CA3P
CA3N
12 B
11 B
G39(B)
Power Management Control ECU
BR
W
LG
LG
LG
LG
B
B
B
B
W
W
W
W
G
G
G
G
W
W
W
W

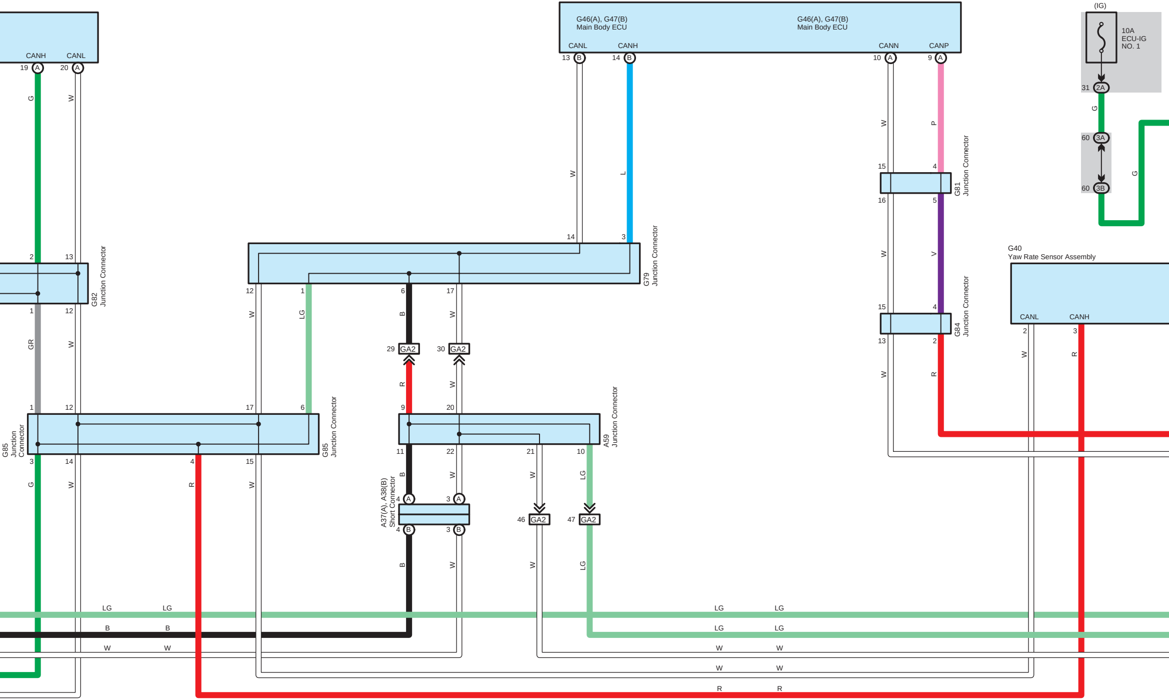
CANH
CANL
19 A
20 A
G
W
G46(A), G47(B)
Main Body ECU
CANL
CANH
13 B
14 B
G46(A), G47(B)
Main Body ECU
CANN
CANP
10 A
9 A
(IG)
10A
ECU-IG
NO. 1
31 2A
G
60 3A
60 3B
G
W
L
W
P
15
4
G81
Junction Connector
16
5
W
V
15
4
G84
Junction Connector
13
2
W
R
G40
Yaw Rate Sensor Assembly
CANL
CANH
2
3
W
R
2
13
G82
Junction Connector
1
12
GR
W
14
3
G79
Junction Connector
12
1
6
17
W
LG
B
W
29 GA2
30 GA2
R
W
1
12
17
6
G85
Junction Connector
9
20
A59
Junction Connector
G85
Junction
Connector
3
14
4
15
G
W
R
W
11
22
21
10
B
W
W
LG
4 A
3 A
A37(A), A38(B)
Short Connector
4 B
3 B
46 GA2
47 GA2
B
W
W
LG
LG
LG
LG
LG
B
B
LG
LG
W
W
W
W
W
W
R
R

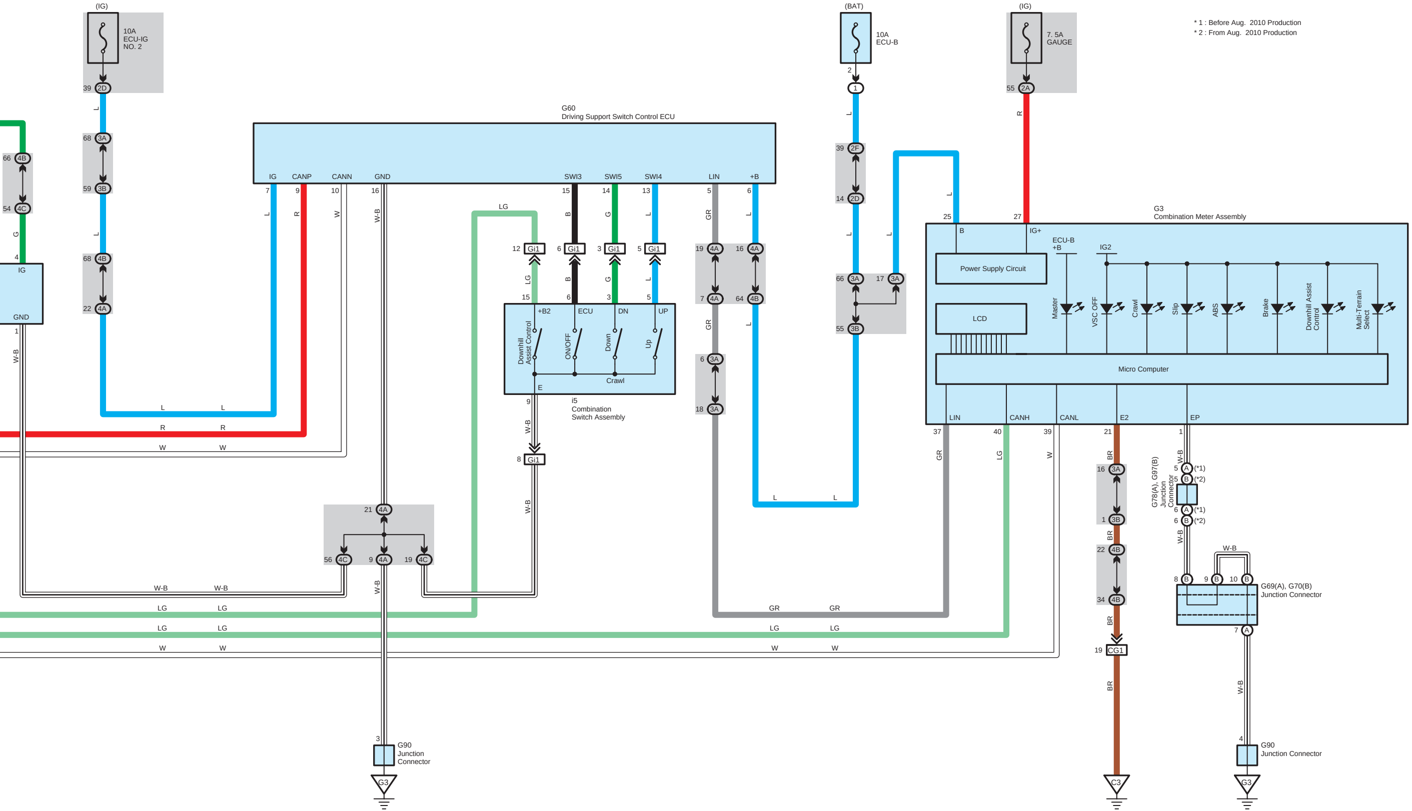
(IG)
10A ECU-IG NO. 2
(BAT)
10A ECU-B
(IG)
7. 5A GAUGE
G60
Driving Support Switch Control ECU
IG
CANP
CANN
GND
SWI3
SWI5
SWI4
LIN
+B
i5
Combination Switch Assembly
+B2
ECU
DN
UP
Downhill Assist Control
ON/OFF
Down
Up
Crawl
E
G3
Combination Meter Assembly
B
IG+
ECU-B +B
IG2
Power Supply Circuit
LCD
Micro Computer
Master
VSC OFF
Crawl
Slip
ABS
Brake
Downhill Assist Control
Multi-Terrain Select
LIN
CANH
CANL
E2
EP
G78(A), G97(B) Junction Connector
G69(A), G70(B) Junction Connector
G90 Junction Connector
G3
C3
CG1
Gi1
IG
GND
L
R
W
W-B
LG
GR
BR
B
G
* 1 : Before Aug. 2010 Production
* 2 : From Aug. 2010 Production