AUDIO & VISUAL SYSTEM

COMPONENTS

6709Q-01

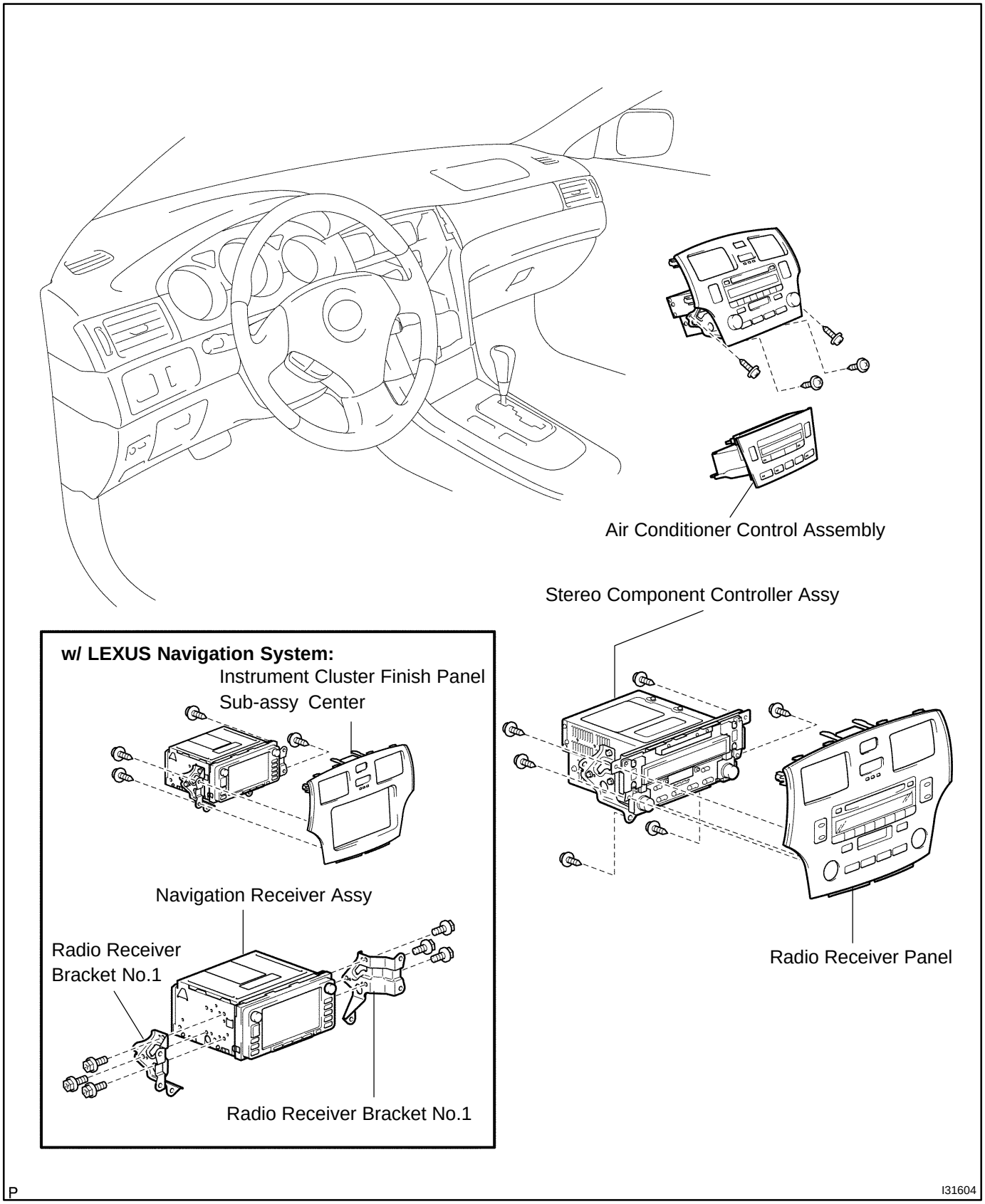

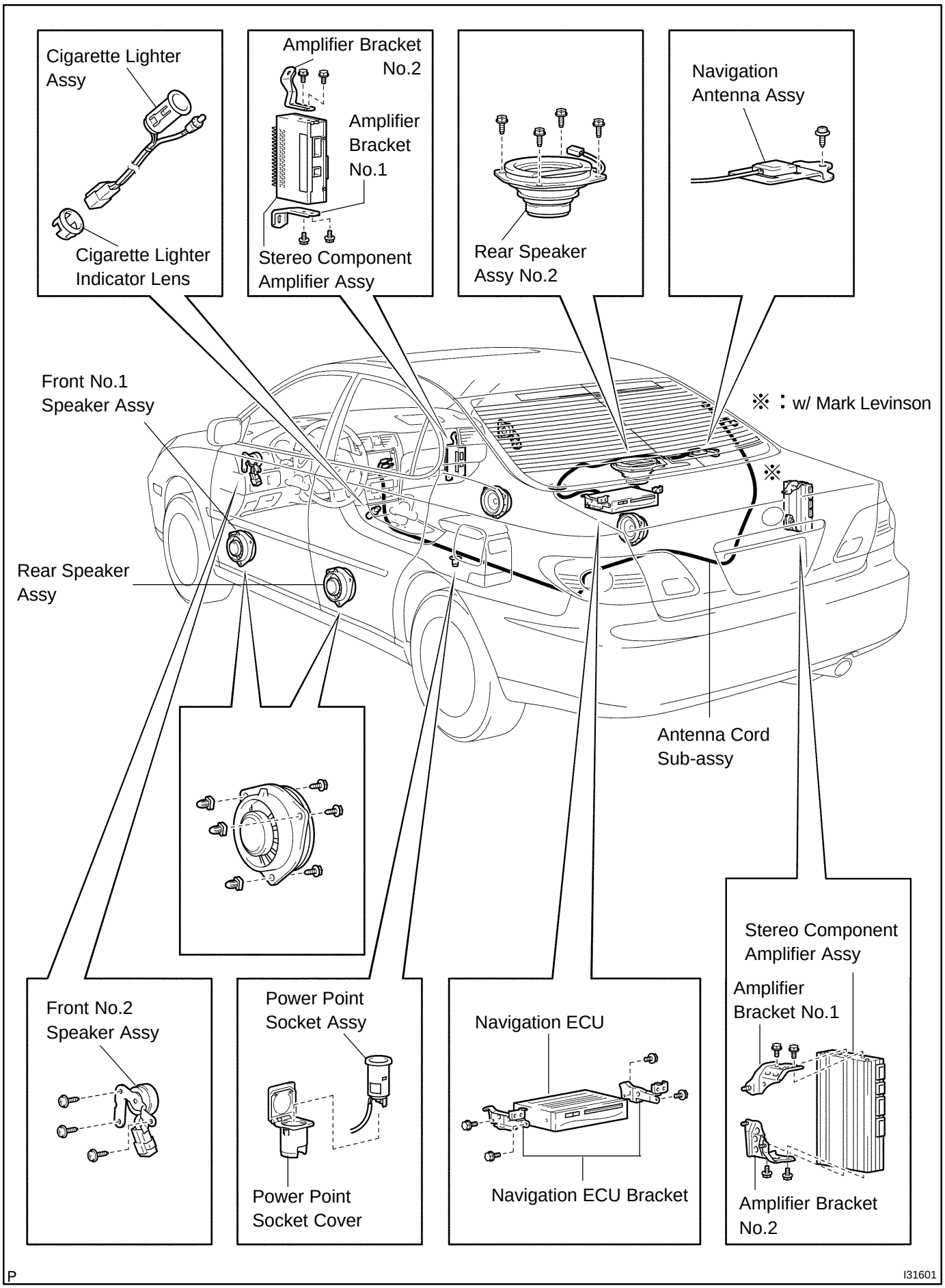
Cigarette Lighter Assy
Cigarette Lighter Indicator Lens
Amplifier Bracket No.2
Amplifier Bracket No.1
Stereo Component Amplifier Assy
Rear Speaker Assy No.2
Navigation Antenna Assy
Front No.1 Speaker Assy
※ : w/ Mark Levinson
※
Rear Speaker Assy
Antenna Cord Sub-assy
Front No.2 Speaker Assy
Power Point Socket Assy
Power Point Socket Cover
Navigation ECU
Navigation ECU Bracket
Stereo Component Amplifier Assy
Amplifier Bracket No.1
Amplifier Bracket No.2
P
I31601