FRONT BUMPER

COMPONENTS
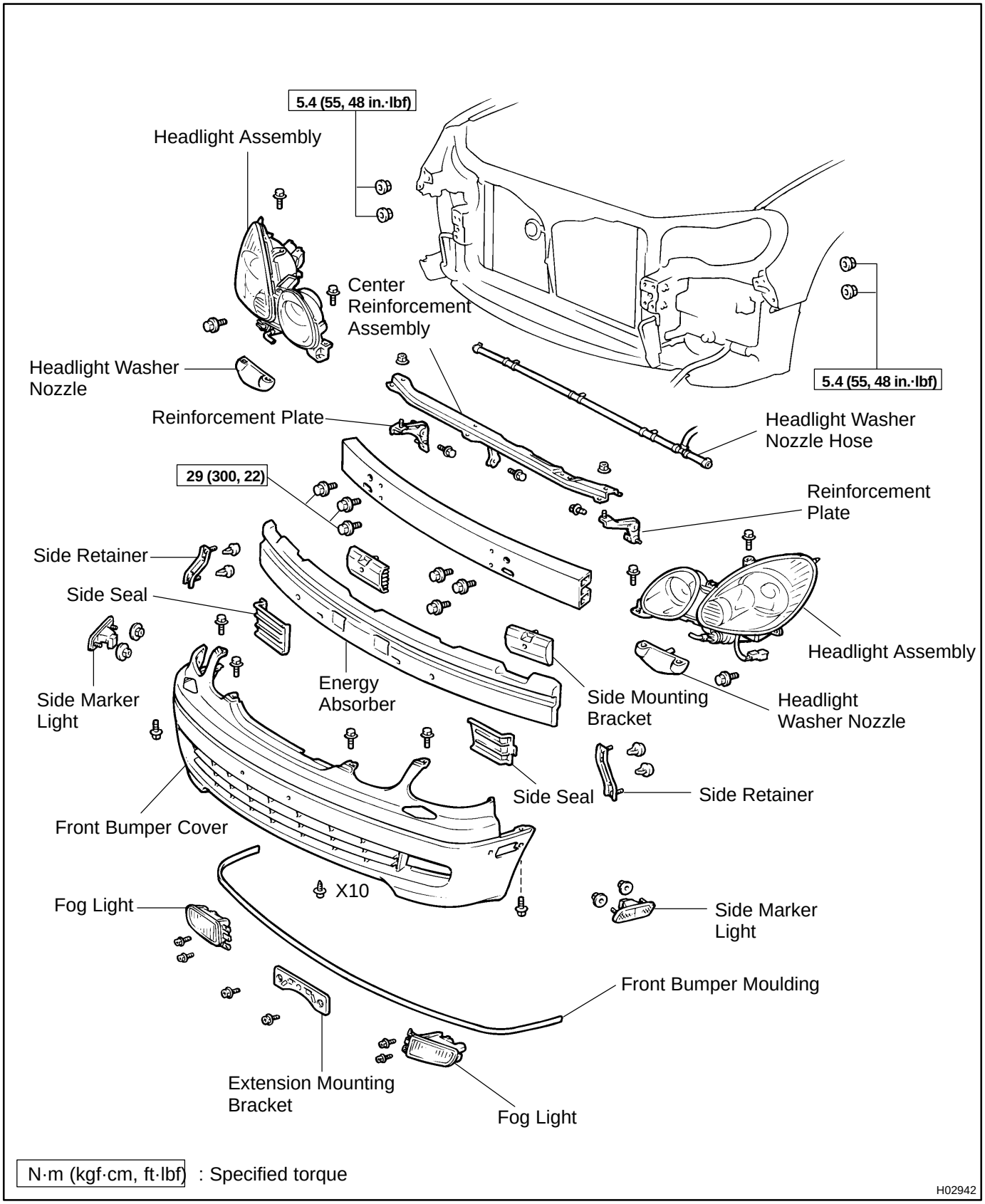
BO0UT–03