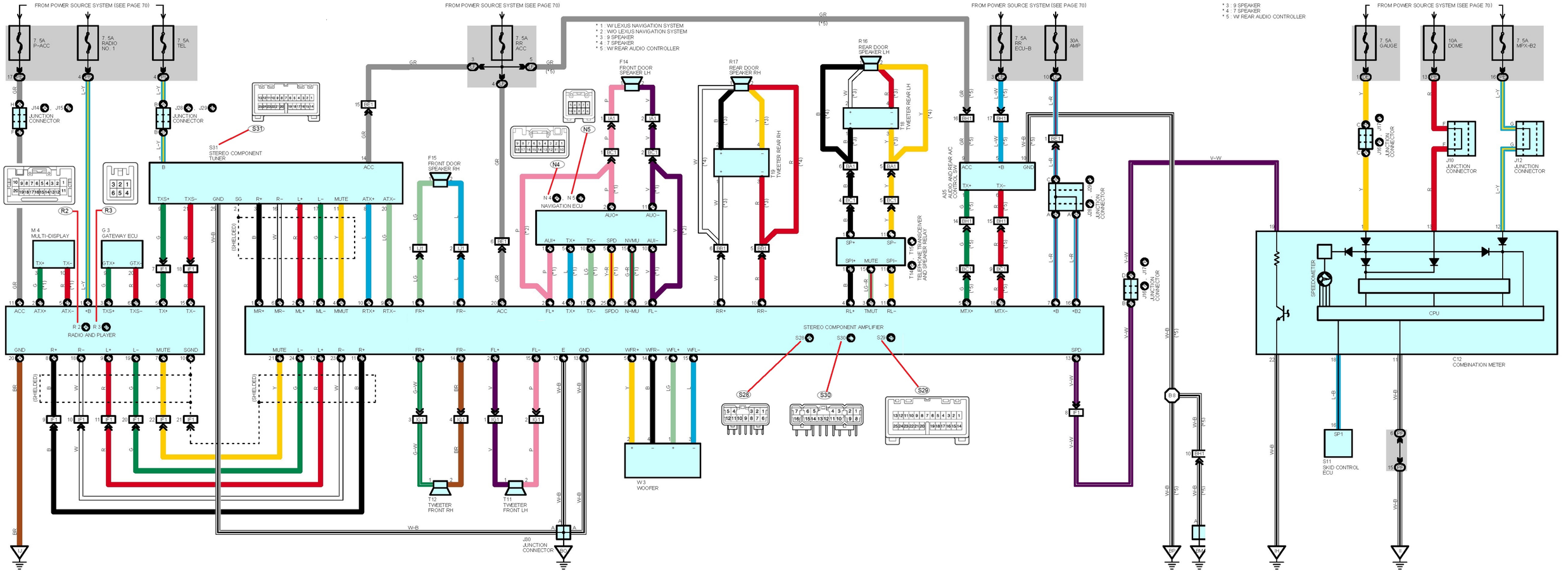
FROM POWER SOURCE SYSTEM (SEE PAGE 70)
7.5A P-ACC
7.5A RADIO NO. 1
7.5A TEL
7.5A RR ACC
7.5A RR ECU-B
30A AMP
7.5A GAUGE
10A DOME
7.5A MPX-B2
* 1 : W/ LEXUS NAVIGATION SYSTEM
* 2 : W/O LEXUS NAVIGATION SYSTEM
* 3 : 9 SPEAKER
* 4 : 7 SPEAKER
* 5 : W/ REAR AUDIO CONTROLLER
* 3 : 9 SPEAKER
* 4 : 7 SPEAKER
* 5 : W/ REAR AUDIO CONTROLLER
J14 J15 JUNCTION CONNECTOR
J28 J29 JUNCTION CONNECTOR
S31 STEREO COMPONENT TUNER
F14 FRONT DOOR SPEAKER LH
F15 FRONT DOOR SPEAKER RH
R17 REAR DOOR SPEAKER RH
R16 REAR DOOR SPEAKER LH
T18 TWEETER REAR LH
T19 TWEETER REAR RH
T14 TELEPHONE TRANSCEIVER AND SPEAKER RELAY
A35 AUDIO AND REAR A/C CONTROL SW
J26 J27 JUNCTION CONNECTOR
J16 J17 JUNCTION CONNECTOR
J10 JUNCTION CONNECTOR
J12 JUNCTION CONNECTOR
M4 MULTI-DISPLAY
G3 GATEWAY ECU
R2 R3 RADIO AND PLAYER
N4 N5 NAVIGATION ECU
STEREO COMPONENT AMPLIFIER
S28 S30 S29
T12 TWEETER FRONT RH
T11 TWEETER FRONT LH
W3 WOOFER
J30 JUNCTION CONNECTOR
SPEEDOMETER
CPU
C12 COMBINATION METER
S11 SKID CONTROL ECU
(SHIELDED)