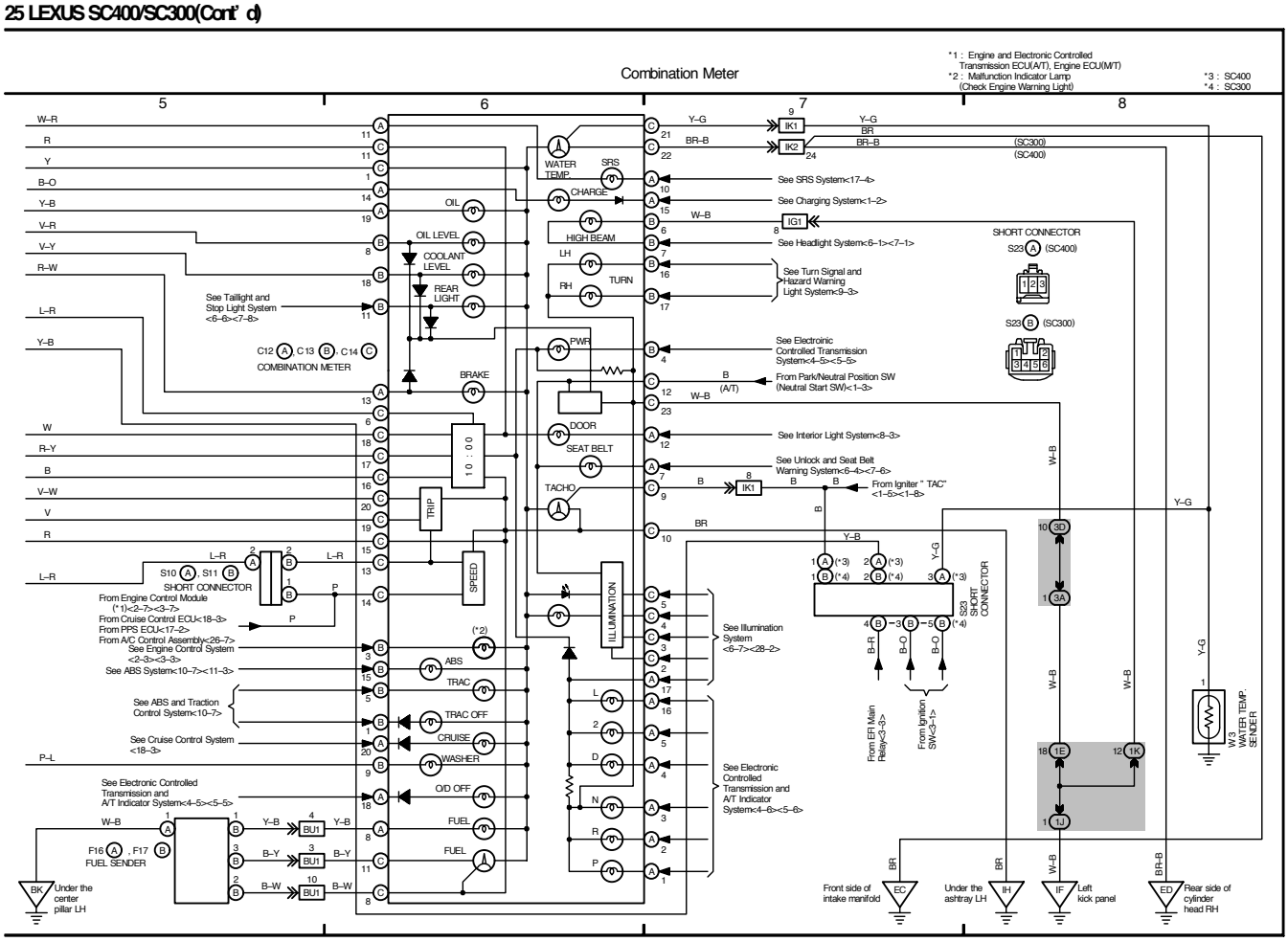25 LEXUS SC400/SC300(Cont' d)