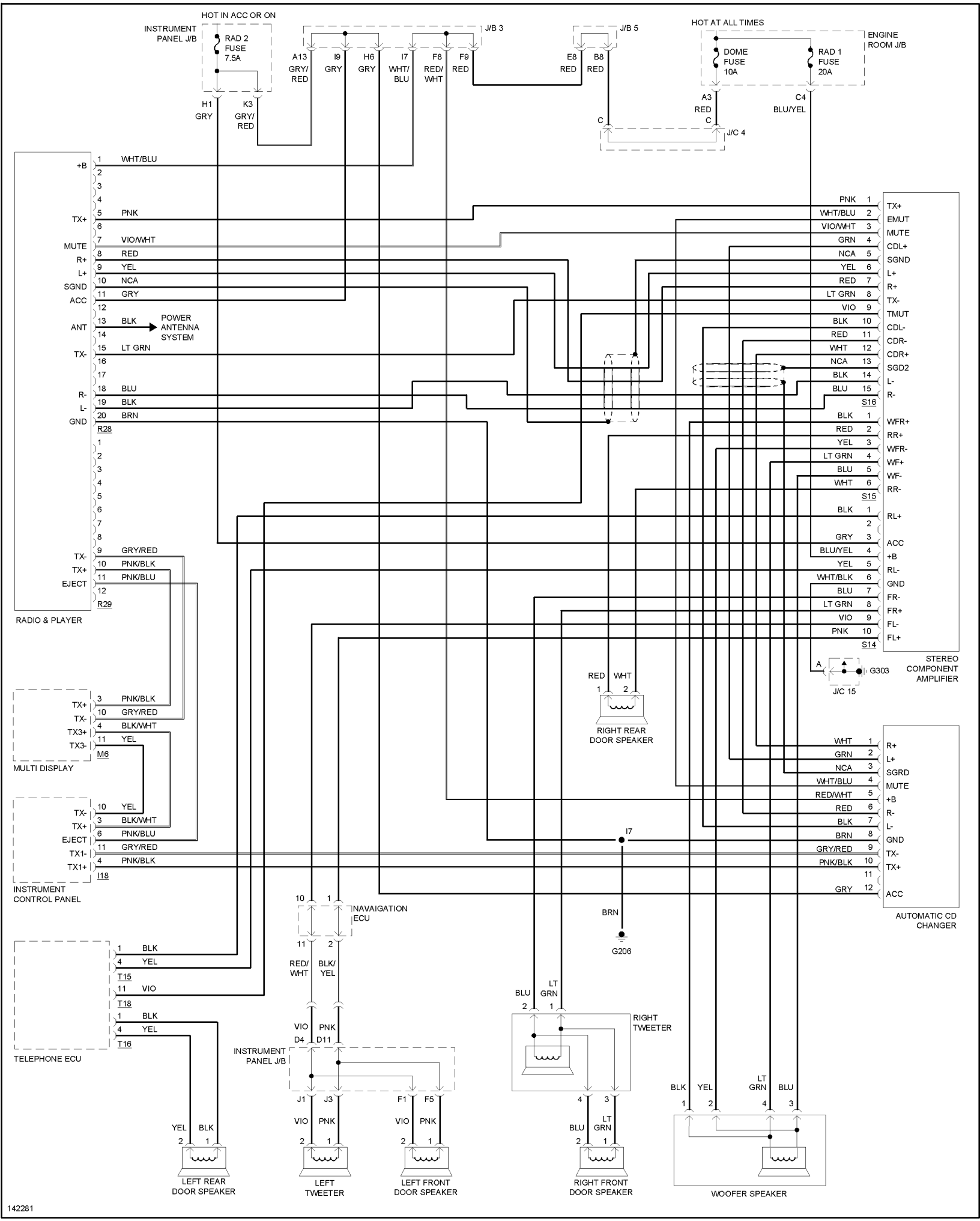
HOT IN ACC OR ON
INSTRUMENT PANEL J/B
RAD 2 FUSE 7.5A
H1 GRY
K3 GRY/RED
J/B 3
A13 GRY/RED
I9 GRY
H6 GRY
I7 WHT/BLU
F8 RED/WHT
F9 RED
J/B 5
E8 RED
B8 RED
C
J/C 4
HOT AT ALL TIMES
ENGINE ROOM J/B
DOME FUSE 10A
RAD 1 FUSE 20A
A3 RED
C4 BLU/YEL
RADIO & PLAYER
+B 1 WHT/BLU
TX+ 5 PNK
MUTE 7 VIO/WHT
R+ 8 RED
L+ 9 YEL
SGND 10 NCA
ACC 11 GRY
ANT 13 BLK
POWER ANTENNA SYSTEM
TX- 15 LT GRN
R- 18 BLU
L- 19 BLK
GND 20 BRN
R28
TX- 9 GRY/RED
TX+ 10 PNK/BLK
EJECT 11 PNK/BLU
R29
STEREO COMPONENT AMPLIFIER
PNK 1 TX+
WHT/BLU 2 EMUT
VIO/WHT 3 MUTE
GRN 4 CDL+
NCA 5 SGND
YEL 6 L+
RED 7 R+
LT GRN 8 TX-
VIO 9 TMUT
BLK 10 CDL-
RED 11 CDR-
WHT 12 CDR+
NCA 13 SGD2
BLK 14 L-
BLU 15 R-
S16
BLK 1 WFR+
RED 2 RR+
YEL 3 WFR-
LT GRN 4 WF+
BLU 5 WF-
WHT 6 RR-
S15
BLK 1 RL+
GRY 3 ACC
BLU/YEL 4 +B
YEL 5 RL-
WHT/BLK 6 GND
BLU 7 FR-
LT GRN 8 FR+
VIO 9 FL-
PNK 10 FL+
S14
G303
J/C 15
RED WHT
RIGHT REAR DOOR SPEAKER
MULTI DISPLAY
TX+ 3 PNK/BLK
TX- 10 GRY/RED
TX3+ 4 BLK/WHT
TX3- 11 YEL
M6
INSTRUMENT CONTROL PANEL
TX- 10 YEL
TX+ 3 BLK/WHT
EJECT 6 PNK/BLU
TX1- 11 GRY/RED
TX1+ 4 PNK/BLK
I18
AUTOMATIC CD CHANGER
WHT 1 R+
GRN 2 L+
NCA 3 SGRD
WHT/BLU 4 MUTE
RED/WHT 5 +B
RED 6 R-
BLK 7 L-
BRN 8 GND
GRY/RED 9 TX-
PNK/BLK 10 TX+
GRY 12 ACC
I7
BRN
G206
NAVAIGATION ECU
10 1
11 2
RED/WHT BLK/YEL
TELEPHONE ECU
1 BLK
4 YEL
T15
11 VIO
T18
1 BLK
4 YEL
T16
VIO PNK
D4 D11
INSTRUMENT PANEL J/B
J1 J3 F1 F5
VIO PNK VIO PNK
BLU LT GRN
RIGHT TWEETER
BLU LT GRN
BLK YEL LT GRN BLU
YEL BLK
LEFT REAR DOOR SPEAKER
LEFT TWEETER
LEFT FRONT DOOR SPEAKER
RIGHT FRONT DOOR SPEAKER
WOOFER SPEAKER
142281