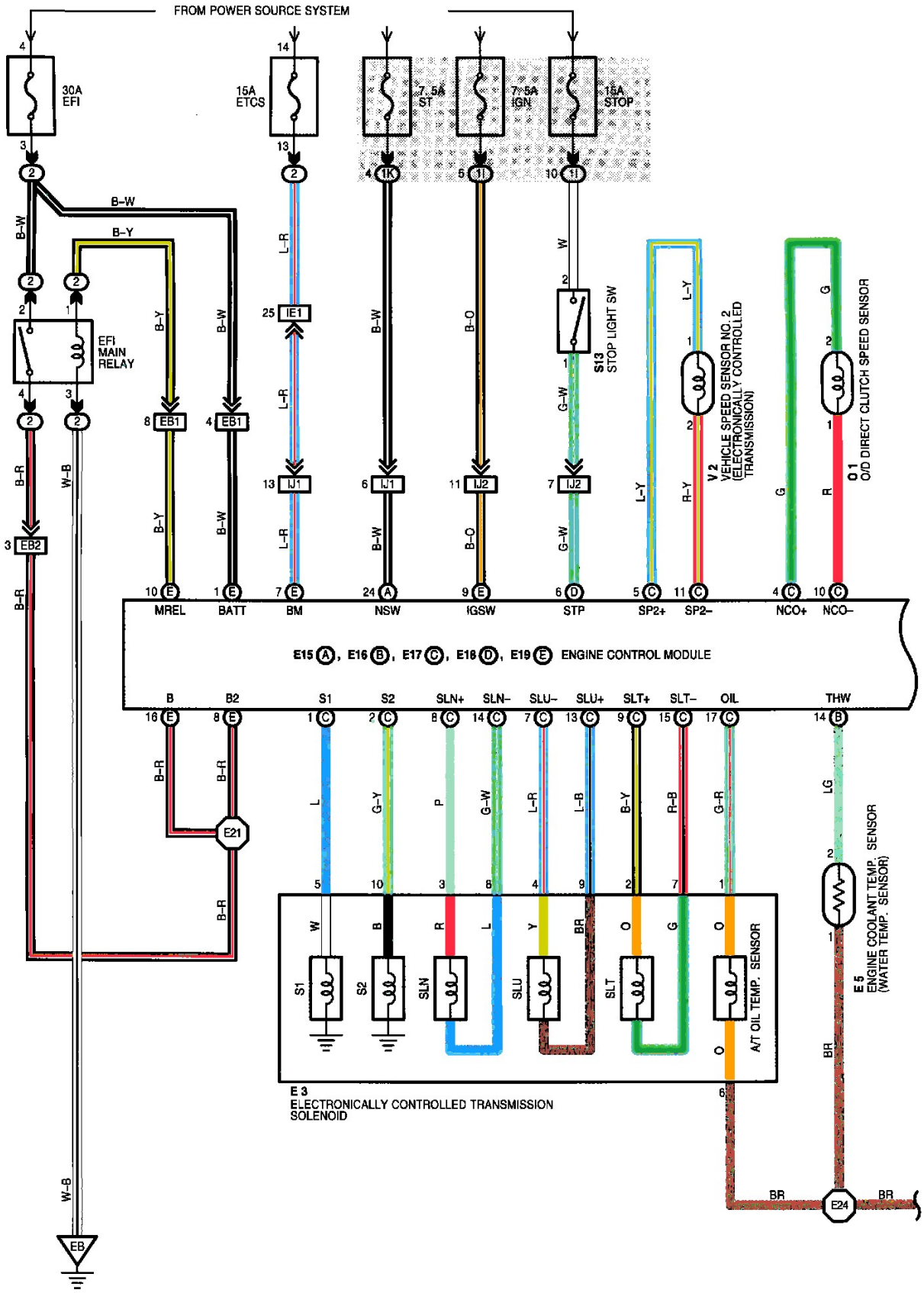

Electronically Controlled Transmission And A/T Indicator (Part 1 Of 3)