0540P–01

LOCATION

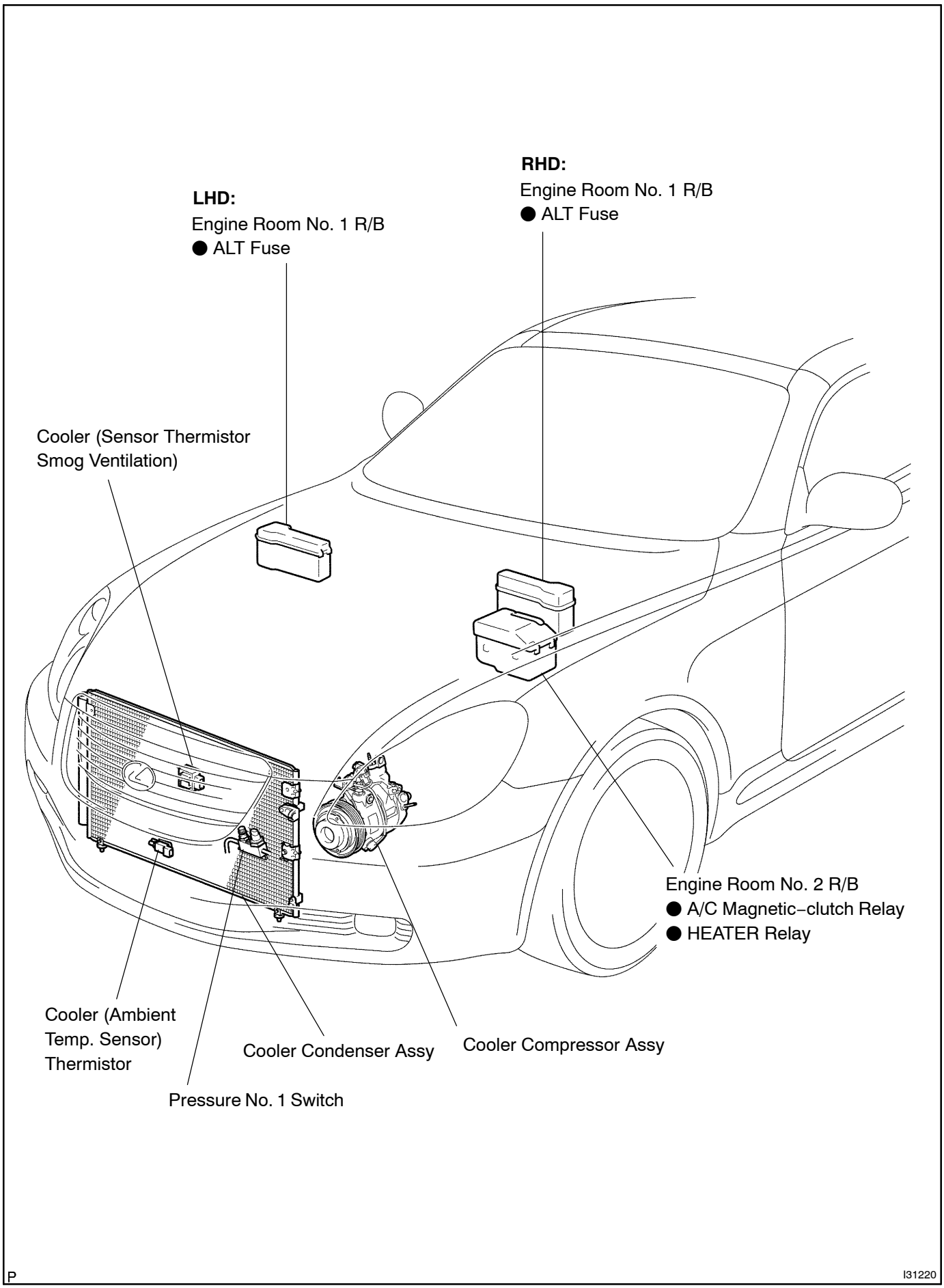

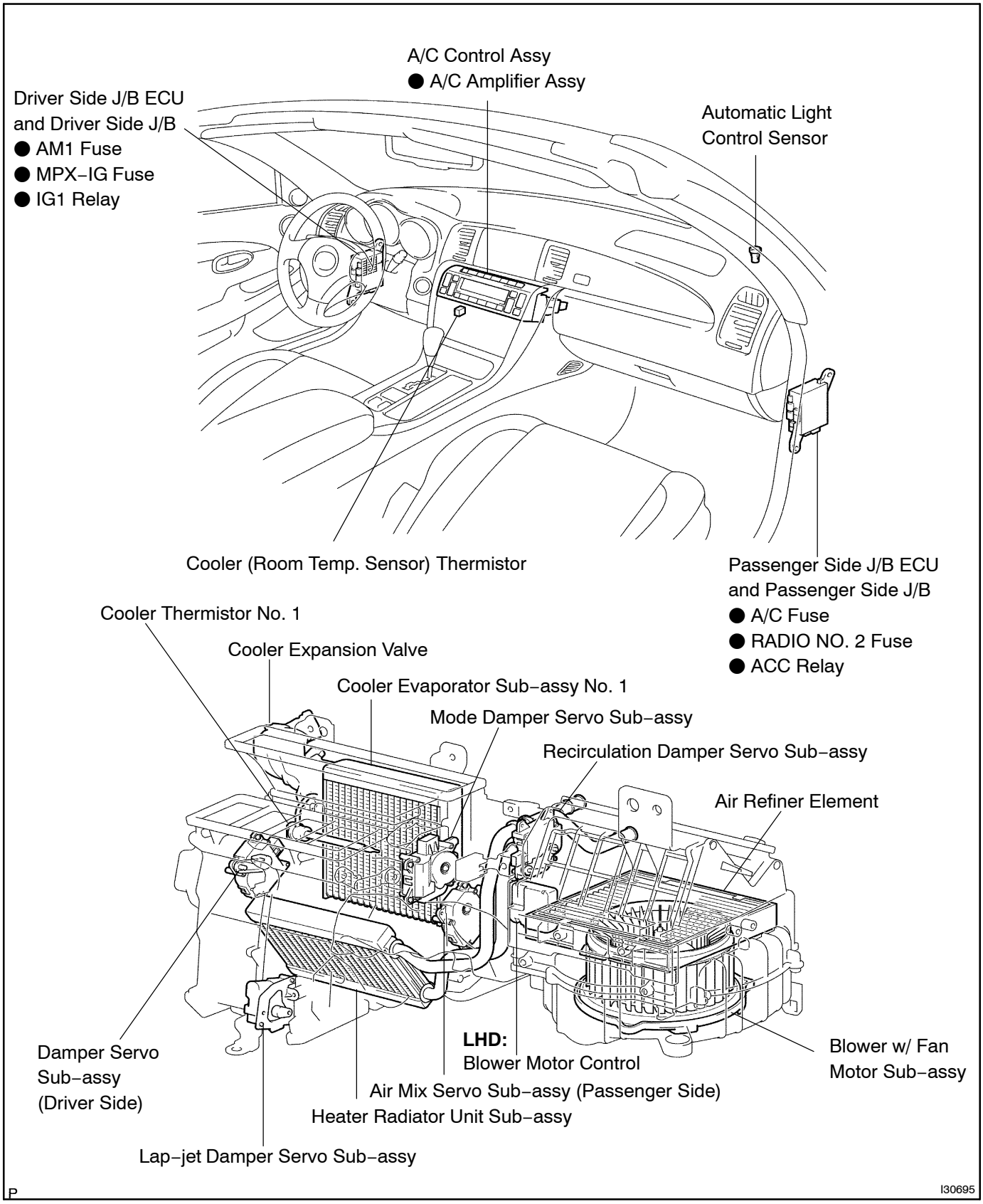
A/C Control Assy
● A/C Amplifier Assy
Driver Side J/B ECU
and Driver Side J/B
● AM1 Fuse
● MPX–IG Fuse
● IG1 Relay
Automatic Light
Control Sensor
Cooler (Room Temp. Sensor) Thermistor
Passenger Side J/B ECU
and Passenger Side J/B
● A/C Fuse
● RADIO NO. 2 Fuse
● ACC Relay
Cooler Thermistor No. 1
Cooler Expansion Valve
Cooler Evaporator Sub–assy No. 1
Mode Damper Servo Sub–assy
Recirculation Damper Servo Sub–assy
Air Refiner Element
Damper Servo
Sub–assy
(Driver Side)
LHD:
Blower Motor Control
Blower w/ Fan
Motor Sub–assy
Air Mix Servo Sub–assy (Passenger Side)
Heater Radiator Unit Sub–assy
Lap–jet Damper Servo Sub–assy
P
I30695